DRY LAKES RACERS AUSTRALIA

2021
RULE BOOK

DRY LAKES RACERS AUSTRALIA
Presents
2021 DLRA Speed Week Rules
(Based on 2020 SCTA Rulebook)

NOTICE:

The rules and/or regulations set forth herein are designed to provide for the orderly conduct of racing events and to establish minimum acceptable requirements for such events. These rules govern all events, and by participating in these events all participants are deemed to have complied with these rules. NO EXPRESSED OR IMPLIED WARRANTY OF SAFETY SHALL RESULT FROM PUBLICATIONS OF, OR COMPLIANCE WITH, THESE RULES AND/OR REGULATIONS. They are intended as a guide for the conduct of the sport and are in no way a guarantee against injury or death to a participant, spectator or official.

The *Race Director* is empowered to permit minor deviation from any of the specifications herein or impose any further restrictions that in his opinion do not alter the minimum acceptable requirements. NO EXPRESSED OR IMPLIED WARRANTY OF SAFETY SHALL RESULT FROM SUCH ALTERATION OF SPECIFICATIONS. Any interpretation or deviation of these rules is left to the discretion of the officials. Their decision is final.

Although a participant's vehicle meets all safety and technical regulations, the vehicle may not be allowed to compete due to

environmental or course conditions or other considerations. All decisions of the *Race Director* and the DLRA Contest Board are final.

All regulations are subject to change without notice; in the event of change, all prior inspections and classifications are nullified. Any request for deviation from any rule contained in this rule book shall be submitted, in writing, in accordance with the RULE CHANGE DEVIATION procedure, Section 1.R.

*The rule change process is an ongoing one. Any active DLRA member may submit a request for a rule change or clarification at any time by obtaining the proper form on-line at www.dlra.org.au or the registration van at an event or by using the form **B3** in the appendix to this rule book. The form shall be completely filled out and shall be submitted by Australia Post or emailed to info@dlra.org.au. The forms will be routed through to the Rule Book Coordinator and then the appropriate technical chair and committees for comment. When all appropriate research is completed, issues will be put on the agenda for discussion at the next scheduled meeting (usually in May, October and January of each year). Submissions received after 1st May of any year will not be considered until the next year's agenda*.

IMPORTANT

Bold face words or sentences indicates updated rules.

ALL PORTIONS THAT ARE CAPITALISED CONTAIN IMPORTANT INFORMATION.

Italicised type indicates DLRA specific requirements.

Amendments

Contents

SECTION 1 GENERAL COMPETITION REQUIREMENTS 28

1.A TECHNICAL INSPECTION: 28
1.B CLASSIFICATION: 31
1.B.1 ..... CLASS CHANGE: 32
1.C STARTER: 33
1.D WEATHER: 33
1.E COURSE: 33
1.F QUALIFYING: 34
1.F.1 ..... VEHICLE QUALIFYING 34
1.F.2 ..... RECORD QUALIFYING 35
1.G AUSTRALIAN RECORD RUNS: 36
1.H RECORD BODY AND CLASS CERTIFICATION: 37
1.I PROTESTS: 38

1.J TROPHIES: 39
1.K TIMING PLAQUE: 39
1.L PARTICIPANT CONDUCT: 39
1.M ..... DRIVER LICENSING: 41
1.N COURSE DAMAGE: 43
1.O RETENTION OF VEHICLE AND/OR PARTS: 43
1.P TECHNICAL COMMITTEES: 44
1.Q SAFETY EQUIPMENT: 44
1.R RULE DEVIATION PROCEDURE: 44
1.S PARTICIPANT COMMUNICATIONS: 45
1.T. FUEL STORAGE AND USE 45
1.T.1 ..... SPEED WEEK ENTRY FORM ATTACHMENT: 45
1.T.2 ..... SIGNAGE: 46
1.T.3 ..... CONTAINMENT: 46
1.T.4 ..... DISPENSING OF FUEL: 46
1.T.5 ..... FIRE FIGHTING EQUIPMENT: 46
1.T.6 ..... DISPENSING OF FUEL AT THE START LINE: 47
1.T.7 ..... FAILURE TO COMPLY: 47
1.U VOLUNTEERING 47
1.V RED AND YELLOW TAGS 48

SECTION 2 CAR COMPETITION SPECIFICATIONS 49

2.A ENGINES: 49
2.A.1 ..... VINTAGE ENGINES 50
2.B FUELS: 53
2.B.1 ..... FUEL CLASSES: 53
2.B.2 ..... GASOLINE CLASSES: 53
2.B.3 ..... VINTAGE GASOLINE: 55
2.B.3.1 ..... ADDITIVES 55
2.B.3.1 A ..... ETHANOL-BLENDED FUEL 56
2.C FRAMES/CHASSIS: 56
2.D SHOCKS: 56
2.E DRIVE HUBS: 56
2.F TIRES: 56
2.G WHEELS: 58
2.H TREAD: 60
2.I PUSH BARS: 60
2.J BALLAST: 60
2.K APPEARANCE: 60
2.L NUMBER/CLASS DESIGNATION: 61
2.M ..... CANOPIES: 61
2.N REPLICA BODIES AND PANELS: 61

2.O TARPAULINS AND TONNEAU COVERS: 62
2.P FOUR-WHEEL DRIVE: 62
2.Q COMPUTER: 62
2.R DATA RECORDERS: 62
SECTION 3 TECHNICAL SPECIFICATIONS & REQUIREMENTS 63

3.A DRIVER'S CLOTHING: 63
3.A.1 ..... MINIMUM DRIVER'S SUIT REQUIREMENTS: 63
3.A.2 ..... DRIVER'S HELMET: 64
3.A.3 ..... DRIVER'S HELMET SUPPORT: 64
3.B ROLL CAGES: 65
3.B.1 ..... ROLL CAGE: 65
3.B.2 ..... ROLL CAGE PADDING: 72
3.C HEAD REST: 72
3.D DRIVER RESTRAINTS 72
3.D.1 ..... SEATS: 72
3.D.2 ..... SEAT BELTS: 73
3.D.3 ..... ARM/LEG RESTRAINTS: 76
3.E DRIVER'S COMPARTMENT: 78
3.F FIREWALL: 79
3.G SECONDARY FLOORING: 79

3.H TRANSMISSION SHIELDS: 80
3.H.1 ..... TRANSMISSIONS: 80
3.I FUEL SYSTEMS: 80
3.I.1 ..... FUEL SHUT-OFF: 81
3.I.2 ..... NITROUS OXIDE SYSTEMS: 81
3.I.3 ..... DIESEL FUEL SYSTEMS: 81
3.J THROTTLES: 81
3.K BATTERIES: 82
3.L STEERING: 82
3.M ..... PARACHUTE: 83
3.N PARACHUTE RELEASE: 84
3.O FLYWHEELS, FLYWHEEL SHIELDS AND BELLHOUSINGS: 84
3.P EXHAUST SYSTEM: 85
3.Q FIRE EXTINGUISHING SYSTEMS: 85
3.R COOLING SYSTEM: 88
3.S DRIVE LINES: 88
3.T FRONT END AND SUSPENSION: 88
3.U WINDOWS AND WINDSHIELDS: 89
3.V HOODS: 90
3.W ..... BRAKES: 90
3.X BLOWER RESTRAINT SYSTEM: 91
3.Y OIL TANK VENTING: 91
3.Z DZUS FASTENERS: 91

SECTION 4 DEFINITIONS 92

4.A AIR DUCT: 92
4.B AIR INTAKES: 92
4.C AIR VENTS: 92
4.D AUTOMOBILE: 92
4.E AUTOMOTIVE PRODUCTION: 93
4.F BALLAST: 93
4.G BELLY PAN: 93
4.H BOBBING: 93
4.I CHOPPING: 94
4.I.1 ..... CHANNELING: 94
4.J CONTEST BOARD: 94
4.K CONTOUR AND BODY RELATIONSHIP: 94
4.L COVERED WHEEL: 94
4.M ..... DRIVER/RIDER COMMITTEE: 94
4.N.1 ..... ENGINE SWAP: 95
4.N.2 ..... PORT CONFIGURATION: 95
4.O FIREWALL: (NON-PRODUCTION) 96
4.P FLOORBOARDS: 96
4.Q GASOLINE: 96
4.R HOOD SCOOPS: 96
4.S INCIDENT REVIEW COMMITTEE: 97
4.T TECHNICAL INSPECTION COMMITTEE: 97
4.U LIMB RESTRAINT: 97

4.V OPEN CAR: 98
4.W ..... OPEN WHEEL: 98
4.X ROOF RAILS: 98
4.Y SECTIONED: 98
4.Z SECONDARY FLOORING: 98
4.AA ..... SET BACK: 99
4.BB ..... WINDSHIELD POST MOUNTING SUPPORT: 99
4.CC ..... STREAMLINING: 99
4.CC.1 ..... AIR DAMS AND SPLITTERS: 99
4.CC.2 ..... AXLE FAIRING: 100
4.CC.3 ..... BELLY PAN: 100
4.CC.5 ..... PARACHUTE PACK MOUNTS: 100
4.CC.6 ..... PARACHUTE MOUNTING TUBES: 101
4.CC.7 ..... SKIRTS: 101
4.CC.8 ..... SPOILER: 101
4.CC.9 ..... STRAKE: 104

4.CC.10 TRIP FENCES: 104
4.CC.11 VORTEX GENERATORS: 104
4.CC.12 WINGS: 105
4.DD STREET EQUIPMENT: 105
4.EE STEP PAN: 105
4.FF SUPERCHARGED: 106
4.GG TECHNICAL ADVISORY COMMITTEE: 106
4.HH WHEELBASE: 106
4.II DRIVESHAFT: 106
4.JJ BUMPER: 107
4.KK OEM BODY KIT: 107
4.LL COMPUTER: 107
4.MM COWL: 107
4.NN BAIL OUT: 108
SECTION 5 CAR CLASSES 109

5.A SPECIAL CONSTRUCTION CATEGORY 109

5.A.1 .....STREAMLINER - /BFS, /FS, /BGS, /GS, /DS 109
5.A.2 ..... LAKESTER - /BFL, /FL, /BGL, /GL 110
5.A.3 .....ELECTRIC VEHICLE - /E 111
5.A.4 ..... TURBINE VEHICLE - /T 111
5.A.5 ..... STEAM VEHICLE - /S 112
5.B VINTAGE CATEGORY..... 112
5.B.1..... MODIFIED ROADSTER - /BFMR, /FMR, /BGMR, /GMR 114
5.B.1.A..... REAR ENGINE MODIFIED ROADSTER - /BFRMR, /FRMR, /BGRMR, /GRMR.....116
5.B.2.....FUEL-GAS ROADSTER - /BFR, /FR, /BGR, /GR 118
5.B.2.A..... AMERICAN IRON ROADSTER – C/AIR (GAS ONLY) 120
5.B.3..... STREET ROADSTER - /BSTR, /STR (GAS ONLY) 121
5.B.4..... VINTAGE COUPE CLASSES: 124
5.B.5.....VINTAGE OVAL TRACK /VOT, MIDGET VINTAGE OVAL TRACK /MVOT 126
5.C CLASSIC CATEGORY 128
5.D MODIFIED CATEGORY 130
5.D.1.A ....COMPETITION COUPE & SEDAN - /BFCC, /FCC, /BGCC, /GCC 132

5.D.1.B..... COMPETITION UTE - /BFCU, /FCU, /BGCU, /GCU 134
5.D.2.A ..... ALTERED COUPE - /BFALT, /FALT, /BGALT, /GALT 135
5.D.2.B..... ALTERED UTE - /BFALTU, /FALTU, /BGALTU, /GALTU 137
5.D.3.A ..... GAS COUPE - /BGC, /GC 139
5.D.3.B..... GAS UTE - /BGU, /GU 141
5.D.4 .....MODIFIED SPORTS - /BFMS, /FMS, /BGMS, GMS 143
5.D.4A .....MODIFIED GRAND TOURING SPORT (GAS ONLY) 144
5.D.5 ..... MODIFIED PICKUP TRUCK - /BMP, /MP 148
5.D.6 ..... MODIFIED MID/MINI PICKUP TRUCK - /BMMP, /MMP 149
5.D.7 ..... TRACK AND CIRCUIT CARS 150
5.D.7A .....TRACK NASCAR - /TNGEN1, /TNGEN2, /TNGEN3, /TNGEN4, /TNGEN5 150
5.D.7B.....TRACK AUSCAR - /TAUS 152
5.D.7C..... TRACK SUPERCAR - /TS3A, /TSV8 154
5.E PRODUCTION CATEGORY 156
5.E.1.A ..... PRODUCTION COUPE AND SEDAN - /PRO 158

5.E.1.B .. PRODUCTION UTE - /PROU *THIS CLASS ENCOMPASSES UTES THAT ARE A DERIVATIVE OF AN AUSTRALIAN BASED SEDAN 1928 TO THE CURRENT YEAR.* 160
5.E.2.A ..... PRODUCTION-SUPERCHARGED - /PS 161
5.E.2.B ..... PRODUCTION-SUPERCHARGED UTE- /PSU 161
5.E.3 ..... GRAND TOURING SPORT - /BGT, /GT 162
5.E.4 ..... PRODUCTION PICKUP TRUCK - /PP (GAS ONLY) 163
5.E.5 ..... PRODUCTION MID/MINI PICKUP TRUCK - P/MP 164
5.F DIESEL TRUCK CATEGORY 165
5.F.1 ..... UNLIMITED DIESEL TRUCK - /UDT 165
5.F.2 ..... MODIFIED DIESEL TRUCK - /MDT 166
5.F.3 ..... HIGHWAY HAULER - /HH2 & /HH3 167
5.F.4 ..... DIESEL TRUCK - /DT 169
SECTION 6 DLRA CAR RECORDS 171

SPECIAL CONSTRUCTION CATEGORY 171
STREAMLINER 171
LAKESTERS 172
ELECTRIC 174
TURBINE 174
VINTAGE CATEGORY 174

MODIFIED ROADSTER....174
ROADSTER....176
STREET ROADSTER....178
VINTAGE COMPETITION COUPE....178
VINTAGE ALTERED COUPE....179
VINTAGE GAS COUPE....179
VINTAGE OVAL TRACK....180
CLASSIC CATEGORY....180
MODIFIED CATEGORY....181
COMPETITION COUPE AND SEDAN....182
COMPETITION UTE....183
ALTERED COUPE....183
ALTERED UTE....185
GAS COUPE / SEDAN....185
GAS UTE....187
MODIFIED SPORTS....187
MODIFIED PICKUP TRUCK....188
PRODUCTION CATEGORY....188
DIESEL TRUCK CATEGORY....191
RETIRED RECORDS....192
SECTION 7 MOTORCYCLE COMPETITION SPECIFICATIONS 193

7.A GENERAL REQUIREMENTS FOR MOTORCYCLES....193
7.A.1 ....RIDER'S LICENSE: 193
7.A.2 .... EVENT PROCEDURES: 193
7.A.3 .... PRODUCTION CLASS RECORDS: 193

7.A.4 .....NEW RACE VEHICLES: 193
7.A.5 ..... APPEARANCE: 194
7.A.6 ..... RULE CHANGES: 194
7.A.7 ..... RIDER POSITION: 195
7.A.8 ..... OEM/ORIGINAL: 195
7.B MOTORCYCLE TECHNICAL SPECIFICATIONS & REQUIREMENTS: 195
7.B.1.....NUMBER/CLASS IDENTIFICATION: 195
7.B.2..... ENGINE SHUT-OFF REQUIREMENTS: 196
7.B.3..... THROTTLE: 197
7.B.4..... CONTROLS: 197
7.B.5.....HEADLIGHTS AND LENSES: 197
7.B.6.....MIRRORS: 197
7.B.7..... FOOT RESTS: 198
7.B.8.....TIRE REQUIREMENTS: 198

7.B.9 ..... VALVE STEMS AND CAPS: 199
7.B.10 ..... WHEELS: 199
7.B.11 ..... GASOLINE: 200
7.B.12 ..... FUELS: 200
7.B.13 ..... FRONT FENDERS/ MUDGUARDS: 200
7.B.14 ..... UNSAFE MOTORCYCLE: 201
7.B.15 ..... WHEEL RETENTION: 201
7.B.16 ..... TOW STARTS, PUSH STARTS: 201
7.B.17 ..... STEERING DAMPER: 201
7.B.18 ..... SEAT AND SADDLE: 202
7.B.19 ..... CHASSIS AND STEERING: 202
7.B.20 ..... EXHAUST: 202
7.B.21 ..... NITROUS OXIDE SYSTEMS: 202
7.B.22 ..... CHAIN GUARD: 203

7.B.23 BRAKES: 203
7.B.24 BALLAST: 203
7.B.25 FUEL SYSTEMS: 204
7.B.26 BATTERIES: 204
7.B.27 SUPERCHARGED: 204
7.B.28 WINDSHIELDS AND WINDSCREENS: 205
7.B.29 COOLING SYSTEM: 205
7.B.30 EXTERNALLY MOUNTED EQUIPMENT E.G. CAMERAS: 205
7.B.31 FRONT WHEEL DRIVE AND TWO WHEEL DRIVE: 205
7.C RIDING APPAREL: 205
7.C.1 RIDER'S HELMET: 206
7.C.2 LEATHERS: 206
7.C.3 BOOTS: 207
7.C.4 GLOVES: 207
7.C.5 BODY ARMOUR: 207

7.D CLASSIFICATION OF DISPLACEMENTS, FRAMES, ENGINES, AND ENGINE TYPES: 207
7.D.1 ..... DESIGNATED FRAME CLASS 208
7.D.2 ..... DESIGNATED ENGINE CLASS 208
7.D.3 ..... ENGINE DISPLACEMENT CLASSES: 209
7.D.4 ..... FRAME CLASS 209
7.E PRODUCTION 210
7.E.1.1 ..... HANDLEBARS: 211
7.E.1.2 ..... FOOTRESTS: 212
7.E.1.3 ..... SIDE AND CENTER STANDS: 212
7.E.1.4 ... AIR CLEANER ELEMENT, TOOLBOX, AND LICENSE PLATE BRACKET: 212
7.E.1.5 ..... NUMBER/CLASS: 212
7.E.1.6 ..... LIGHTING EQUIPMENT AND INSTRUMENTS: 212
7.E.1.7 ..... FAIRINGS, WINDSHIELDS, SEATS AND SIDE PANELS: 213
7.E.1.8 ..... TIRES: 213
7.E.1.9 ..... CHAIN GUARD: 213

7.E.1.10 ..... WHEEL RIMS: 213
7.E.1.11 ..... SUSPENSION HEIGHT ADJUSTMENT: 213
7.E.1.12 ..... REAR SPROCKET: 213
7.E.1.13 ..... ACCESSORIES/OPTIONS 213
7.F MODIFIED PRODUCTION- M, MPS 213
7.F.1 ..... FOOT RESTS: 215
7.F.2 ..... OPTIONAL EXHAUST SYSTEMS: 215
7.F.3 ..... NUMBER/CLASS DESIGNATION PLATES: 215
7.F.4 ..... FENDERS: 215
7.F.5 ..... RESERVED 216
7.F.6 ..... AXLES: 216
7.F.7 ..... FORKS: 216
7.F.8 ..... BRAKES: 216
7.F.9 ..... CHAIN GUARD: 216
7.F.10 ..... ENGINES: 216

7.F.11 ..... OPEN CLASS – MODIFIED PRODUCTION - M 216
7.F.12 ..... PARTIAL STREAMLINING – MODIFIED PRODUCTION - MPS: 217
7.G SPECIAL CONSTRUCTION – A, APS 218
7.G.1 ..... FOOT RESTS: 219
7.G.2 ..... OPTIONAL EXHAUST SYSTEMS: 219
7.G.3 ..... RESERVED 220
7.G.4 ..... RESERVED 220
7.G.5 ..... GAS TANK: 220
7.G.6 ..... WHEELS: 220
7.G.7 ..... BRAKES: 220
7.G.8 ..... CHAIN GUARD: 220
7.G.9 ..... RESERVED 220
7.G.10 ..... OPEN CLASS: – SPECIAL CONSTRUCTION - A 220
7.G.11 ..... PARTIAL STREAMLINING: - SPECIAL CONSTRUCTION - APS 221
7.H STREAMLINER - S 222

7.H.1 .....SEALED FIREWALL: 223
7.H.2 .....FIRE EXTINGUISHING SYSTEM: 223
7.H.3 ..... DRIVER/RIDER SUIT: 223
7.H.4 .....ROLL CAGE: 224
7.H.5 ..SEAT BELTS AND SHOULDER HARNESS AND ARM/LEG RESTRAINTS: 226
7.H.6 ..... RIDER COMPARTMENT: 226
7.H.7 .....WINDSHIELDS: 227
7.H.8 .....FUEL SHUT-OFF: 227
7.H.9 ..... FENDER: 227
7.H.10 ..... CANOPY: 227
7.H.11 .....TIRES AND WHEELS: 228
7.H.12 ..... TEST RUNS: 228
7.H.14 .....STEERING: 229
7.H.15 ..... BRAKES: 229

7.H.16 ..... NUMBER/CLASS IDENTIFICATION: 230
7.H.17 ..... TANKS: 230
7.H.18 ..... ENGINE: 230
7.H.19 ..... SKIDS: 230
7.H.20 ..... BATTERIES: 230
7.H.21 ..... TOWING: 231
7.H.22 ..... CHAIN/BELT GUARD: 231
7.I SIDECAR – SC, TRIKE T 231
7.I.1 ..... PASSENGER: 231
7.I.2 ..... ENGINE LOCATION: 231
7.I.3 ..... DRIVER LOCATION: 231
7.I.4 ..... CHASSIS AND SUSPENSION: 232
7.I.5 ..... STEERING: 232
7.I.6 ..... SIDECAR: 232
7.I.7 ..... WHEELBASE AND TRACK: 233

7.I.8 ..... WHEEL SIZE: 233
7.I.9 ..... TIRES: 233
7.I.10 ..... CHAIN GUARD AND WHEEL COVER: 233
7.I.11 ..... PASSENGER ACCOMMODATION: 233
7.I.11.A. ..... SIDECAR WHEEL LOADING: 234
7.I.12 ..... SIDECAR STREAMLINER - SCS 234
7.I.13 ..... TEST RUNS: 234
7.I.A.1 ..... TRIKE. OR OTHER THREE WHEELED MOTORCYCLE 234
7.I.A.2 – PRODUCTION TRIKE 234
7.I.A.3 - ENGINE LOCATION: 234
7.I.A.4 – DRIVER/RIDER LOCATION: 235
7.I.A.5 – CHASSIS AND SUSPENSION 235
7.I.A.6 – STEERING 235
7.I.A.7 - WHEELBASE AND TRACK: 236
7.I.A.8 WHEEL SIZE: 236
7.I.A.9 TIRES: 236
7.I.A.11 FRONT AND REAR FENDERS 236
7.I.A.12 TRIKE STREAMLINER - TS 236
7.I.A.13 ENGINE CLASSES AND CAPACITIES 236
7.J ENGINE CLASSES 237

7.J.1 ..... PRODUCTION - P: 237
7.J.2 ..... PRODUCTION PUSH ROD P-PP: 237
7.J.3 .....PRODUCTION SUPERCHARGED - PB: 237
7.J.4 ..... PRODUCTION VINTAGE – P-PV: 238
7.J.5 .....CLASS FUEL - F: 238
7.J.6 ..... CLASS GAS - G: 238
7.J.7 ..... CLASS BLOWN FUEL - BF: 238
7.J.8 .....CLASS BLOWN GAS - BG: 238
7.J.9 ..... CLASS PUSH ROD GAS - PG AND PUSH ROD FUEL - PF: 239
7.J.10 ..... CLASS VINTAGE GAS - VG AND VINTAGE FUEL - VF: 239
7.J.10.1 . CLASS VINTAGE BLOWN FUEL - VBF AND VINTAGE BLOWN GAS - VBG: 240
7.J.11 CLASS PUSH ROD BLOWN GAS - PBG AND PUSH ROD BLOWN FUEL - PBF: 240
7.J.12 .....CLASS UNLIMITED FUEL – UF AND UNLIMITED GAS - UG: 240
7.J.13 ..... CLASS Ω (OMEGA): 240

7J.14 ..... CLASSIC ENGINE C 241
7.J.14 A ..... PRODUCTION CLASSIC: CP 241
7.J.14 B..... CLASS CF: 242
7.J.14 C..... CLASS CG: 242
7.J.14 D .....CLASS CBF: 242
7.J14 E ..... CLASS CBG: 242
SECTION 8 ..... DLRA MOTORCYCLE RECORDS 243
50 CUBIC CENTIMETERS (APPROX. 3 CUBIC INCHES) 243
100 CUBIC CENTIMETERS (APPROX. 6.1 CUBIC INCHES)..... 244
125 CUBIC CENTIMETERS (APPROX. 7.6 CUBIC INCHES)..... 246
175 CUBIC CENTIMETERS (APPROX. 10.6 CUBIC INCHES) 248
250 CUBIC CENTIMETERS (APPROX. 15.2 CUBIC INCHES) 250
350 CUBIC CENTIMETERS (APPROX. 21.3 CUBIC INCHES) 252
500 CUBIC CENTIMETERS (APPROX. 30.5 CUBIC INCHES) 254
650 CUBIC CENTIMETERS (APPROX. 39.6 CUBIC INCHES) 257
750 CUBIC CENTIMETERS (APPROX. 45.7 CUBIC INCHES) 259
1000 CUBIC CENTIMETERS (APPROX. 61 CUBIC INCHES)..... 261
1350 CUBIC CENTIMETERS (APPROX. 82.3 CUBIC INCHES) 265
1650 CUBIC CENTIMETERS (APPROX. 100.6 CUBIC INCHES) 269
2000 CUBIC CENTIMETERS (APPROX. 122 CUBIC INCHES) 271
3000 CUBIC CENTIMETERS (APPROX. 183 CUBIC INCHES) 273
UNLIMITED (3000+CC)..... 275

OMEGA 276
RETIRED RECORDS (NO LONGER USED OR AVAILABLE) 277
RECORDS UNDER REVIEW 278
SECTION 9 DLRA OFFICERS & COMMITTEE MEMBERS 2020-2021 279

APPENDIX A VEHICLE DATA CODES 283

CARS 283
MOTORCYCLES 288
APPENDIX B FORMS 296

B-1 SCRUTINEERS CAR INSPECTION & CLASSIFICATION FORM 297
B-2 SCRUTINEERS MOTORCYCLE INSPECTION & CLASSIFICATION FORM 304
B-3 POLICY AND PROCEDURE FOR DLRA RULES COMMITTEE AND RULE CHANGES 311
B-3 RULE CHANGE OR ADDITION SUBMISSION FORM (PETITION) 317
B-4 PROTEST FORM 319
B-5 PROXY FOR MEETING OF THE DRY LAKES RACERS AUSTRALIA 322
B-6 DLRA RESULTS AMENDMENT FORM 325
SUMMARY OF RULE ADDITIONS & CHANGES 327

SECTION 1 GENERAL COMPETITION REQUIREMENTS

The primary responsibility for the safe condition and operation of a vehicle in compliance with all applicable rules and regulations rests with the vehicle's owner and driver. The main concern of the DLRA is to provide a safe place to conduct events. The DLRA produces guidelines based on experience and circulates valid information to help perpetuate the sport. Close observance of the minimum standards set forth in this Rule Book is an important fundamental. IT IS THE RESPONSIBILITY OF BOTH THE ENTRANT AND OPERATOR OF ANY RACE VEHICLE TO BE THOROUGHLY FAMILIAR WITH THE RULES HEREIN AND COMPLY WITH THEM.

NOTICE:

Land Speed Racing is a dangerous sport that carries with it the possibility of serious injury, paralysis or death. There is no such thing as a guaranteed safe high-speed run. Land Speed Racing always carries with it a risk which will always exist no matter how much everyone connected with Land Speed Racing tries to make our sport safer. Although the DLRA works hard to promote and enhance the safety of our sport, there are no guarantees that such safety measures will ensure safety. A participant always has the responsibility for their own safety and the safety of their crew. By participating in Land Speed Racing, the participant accepts all risk of injury, paralysis and or death whether due to negligence, vehicle failure, or otherwise. If at any time a participant does not accept these risks, the participant agrees not to participate in Land Speed Racing.

1.A TECHNICAL INSPECTION:

All inspections will be made using the current year DLRA Rules and Records book. No competitor will be required to modify/revise/rebuild/augment any component or feature of the competition vehicle without a direct citation of the relevant rule and a clear description of the infraction/shortfall/misunderstanding of a specific entry in the rulebook. In the event of a continuing divergence of opinion between the inspector and the competitor the issue shall be referred to the Chief Inspector.

Each participating vehicle (regardless of class) shall completely and satisfactorily pass Technical Inspection before any qualifying runs will be allowed. Two technical inspectors will inspect vehicles competing in classes in which the existing record exceeds 200 MPH. Vehicles competing in classes in which the record exceeds 250 MPH shall be inspected by at least three inspectors.

For cars over 175MPH it is highly recommended that the competitor has available the corner weights as well as front to rear weight bias information of the race vehicle. Ideally the Centre of Pressure and the Centre of Gravity should be marked on top of the vehicle.

Where applicable, vehicles may be inspected with body panels off and on to verify the driver can reach all levers, switches, etc., with the body in place. VEHICLES PRESENTED FOR INSPECTION SHALL BE IN RACE READY CONDITION, i.e. RACE TIRES, SEAT BELTS, PARACHUTES, FIRE BOTTLES, ETC. INSTALLED. It may be required that the vehicle be presented for inspection on the ground. LIMB RESTRAINT SYSTEMS EFFECTIVENESS SHALL BE DEMONSTRATED. All technical

inspections shall be made with the primary driver and all alternate drivers intending to operate the vehicle in attendance unless a driver/rider has already been safety checked as noted in the Logbook and previously operated the vehicle at a DLRA sanctioned race meet. Inspectors shall have discretion in this matter. All vehicle technical inspections will be based on existing class record or the next higher class where a record exists.

Chief Stewards/Inspectors may require any competitor to do a trial 'bail out' from the vehicle where egress will be required in an acceptable amount of time. This procedure is at the discretion of the Chief Inspector.

Any body or engine class change will require re-inspection. Failure to obtain such re-inspection will result in the loss of all times recorded in the new class. VEHICLES EXHIBITING ILL HANDLING SUCH AS SPINS, FIRES, ETC. ON THE COURSE SHALL BE RE-INSPECTED AND MAY BE BARRED FROM FURTHER COMPETITION AT THE DISCRETION OF THE CONTEST BOARD. All vehicles to be re-inspected shall be presented to the inspection area. Decisions by the Contest Board are final.

A DLRA VEHICLE LOGBOOK AND INSPECTION FORM SHALL BE PRESENTED FOR ALL TECHNICAL INSPECTIONS. The competitor for each event shall complete the "Event Record". The "Record of Vehicle Ownership" at the front of the logbook shall be completely filled out. The line entitled "Type of Vehicle" shall include the make, model and year of the vehicle being raced. (This does not apply to Special Construction Category.) A vehicle cannot be declared to be different than the make, model and year as listed. Vehicles may be required to display

an identification sticker matching the logbook number, permanently attached to the frame/chassis. Replacement identification stickers will be issued with DLRA Board approval only upon receipt of a written request citing circumstances. Identification may be required directing emergency personnel to safety devices, e.g. hood releases, electrical shutoff, etc. Race vehicles, components or equipment are not considered approved or compliant by reason of having passed through technical inspection at any time, or any number of times. Moreover, a vehicle which has passed technical inspection at any time or any number of times is not a defense to a violation found on further inspections.

During the safety inspection, the Technical Inspection Committee may assign a speed limit to the vehicle. A sticker will be applied to the vehicle and the speed limit will be noted in the vehicle logbook. This sticker must remain in place until the vehicle is made to conform to the published rules of the class. Under penalty of disqualification, expulsion or permanent ban, no modifications (additions, deletions, or changes) are permitted to either vehicle equipment or driver/rider gear after passing Technical Inspection unless coordinated with the Chief Technical Inspector. This includes any changes in vehicle condition due to breakdowns or failures, flat or damaged tires, spins, fires or any other reason. It is the entrant or driver/rider's responsibility to resubmit the vehicle to tech inspection for approval of any changes.

1.B CLASSIFICATION:

It is the responsibility of the owner and/or driver to enter a vehicle in its proper class *as shown on the entry form.* However,

a vehicle is subject to class verification by the Contest Board at any time *and the Chief Scrutineer or technical committee can review and advise the entrant as to the class of their vehicle*. THE DLRA CONTEST BOARD WILL NOT RECLASSIFY A VEHICLE ENTERED IN THE WRONG CLASS. ALL VEHICLES WILL RUN ONLY IN THE LOWEST PRIMARY CLASS/ CATEGORY FOR WHICH THEY ARE LEGAL. IF A VEHICLE IS NOT LEGAL FOR A SPECIFIC CLASS IT MAY NOT NECESSARILY BE LEGAL FOR ANOTHER CLASS. THE VEHICLE SHALL MEET ALL CLASS REQUIREMENTS TO BE LEGAL FOR COMPETITION. ONCE A VEHICLE HAS LEFT THE STARTING LINE, THE ENTRY NAME AND CLASSIFICATION INFORMATION WILL NOT BE CHANGED.

If an appropriate class exists, a vehicle shall run in that class. Any vehicle which is not legal for any class, but meets all technical regulations, may be allowed to run for time only. No trophies *or certificates* will be awarded for “time only” entries. Any questions regarding the proper classification of a vehicle shall be directed to the class chairperson as listed in Section 9. Vehicle data codes shall be entered on the entry/inspection form. See Vehicle Entry Data Codes - Appendix A in the back of this book. All entrants running in Classic, Modified and Production classes must have pictures of the car as produced with their Logbook for certification purposes.

In all cases, and regardless of other conflicting information on the Entry Form, it shall be the computer codes that determine what class the vehicle is actually entered in.

1.B.1 CLASS CHANGE:

A class change is defined as an engine displacement change, a change from Gas to Fuel, Blown to Un-blown or a body change

such as Gas Coupe to Altered. A class change will require a complete inspection of the vehicle, issuance of a new number by the Registrar, the completion of a Class Change Form, and the payment of additional entry fees.

1.C STARTER:

An official starter and assistant starter will be appointed by either the Contest Board *or by nomination and election at the Annual General Meeting of the DLRA* and will have the authority to bar a vehicle from the course even though it has passed inspection. Such action may be appealed to the Contest Board, which has the power to overrule the starter.

1.D WEATHER:

The Contest Board assumes no responsibility whatsoever for delays, postponements, and cancellation of all or any part of an event because of inclement weather, course conditions, and/or any other reason. The starter/timer may close the racecourse in whole or in part when the wind velocity at any point exceeds 15 MPH or any other adverse condition arises.

1.E COURSE:

The straightaway speed course, conditions permitting, will be an overall distance of at least *five* miles. If conditions permit, there will be two courses available. A "Track 2*"* course of three miles for *motorcycles* under 175 MPH *and cars under 150 MPH*, and a "Track 1" course of *at least five* miles for *motorcycles* over 175 MPH *and cars over 150MPH* or as specified by the Contest Board.

The "Track 1" course will consist of an overall length of at least five miles from the starting line to six timing traps placed as

follows: the first trap timing the speed at the second mile marker, the second trap timing the speed at the first quarter-mile of the second mile, the third trap timing the entire third mile, the fourth trap timing the entire fourth mile and the fifth trap timing the entire fifth mile. Determination of the number of courses, *lengths, traps* and procedures to be used will be made at the beginning of the event and may be changed at any time at the sole discretion of the Contest Board due to weather conditions or safety considerations.

There may be a startup area available. All vehicles shall have a system for the timely removal from the racecourse. Pushing or towing *cars* is an acceptable method of removal.

All new vehicles shall not exceed 175 MPH or a speed as determined by the Technical Committee on the first run. All new vehicles shall deploy the parachute, if equipped, on the first run or as specified by the Contest Board. A new vehicle sticker will be endorsed by the starter following the successful completion of the requirement.

1.F QUALIFYING:

1.F.1 Vehicle Qualifying

All cars, except Streamliners and Lakesters, shall reach 150 MPH on either short course before competing on the long course on Track 1. Cars that have exceeded 150mph must go to Track 1 to perform an observed parachute release, which if successful will qualify them to use the long course on track 1. They may then be timed through the full five miles of the long course on Track 1 at the driver and race directors' discretion. A vehicle must qualify for the long course on track 1 in the SAME class in which

it is entered.
All motorcycles that have reached 175mph on either short course may then be timed through the full five miles of the long course on Track 1 at the rider and race directors' discretion.
Once a car or motorcycle is qualified to run on the long course on track 1 it will be issued with a track 1 'LONG COURSE QUALIFIED' sticker.
All vehicles running Track 1 short course must turn out at the exit after the 3 mile marker or they will be stood down for 24 hours and no speed will be recorded.

1.F.2 Record Qualifying

To qualify for a record attempt, a vehicle shall exceed the existing record by at least .001 MPH. Only one person is allowed in or on a vehicle during competition. The number of qualifying runs allowed each vehicle is unlimited; however, any vehicle or driver considered by the Contest Board to be detrimental to the event may be barred from the course at any time, see Section 1. L.
Track 1 is a combination course which includes both a long and a short course.
Track 2 is a short course only.
Except for Streamliners and Lakesters, record attempts against records of less than 175 MPH SHALL be made on the short course on either track 1 or track 2 regardless of previous vehicle performance.
The same driver/rider shall operate the vehicle for both halves of any record attempt for a record to be valid.

NOTE: Classes with no listed record are considered as open. Record run procedures will be the same as classes where a record exists.

1.G AUSTRALIAN RECORD RUNS:

Two-way average records are established by a two-run average over the same relative or physical mile, depending upon course conditions. Only the fastest average speed will be used for record calculation. A new record shall be attributed where a vehicle exceeds the existing record by at least .001 MPH.
The same engine block shall be used for the two-run average of each record attempt. Qualifying runs that exceed the existing class record are considered to be the first leg of the record attempt.
A qualified vehicle shall proceed directly to the impound area (DO NOT GO TO YOUR PIT) and report to the DLRA impound marshal within 30 minutes of the time stamp on the timing slip. All impounded vehicles will have the option to make their backup run the same day or the next morning.
Vehicles completing a record attempt shall proceed directly to the impound area (DO NOT GO TO YOUR PIT) for certification within 30 minutes of the time stamp on the timing slip.
If for any reason a vehicle is removed from the impound area, the record attempt is forfeited, and the vehicle shall re-qualify. In the event that record runs are cancelled for that day, eligible vehicles need not re-qualify. If the event closes for whatever reason or does not re-open, any record attempts are forfeited. After a vehicle leaves the starting line on a record run, any interruption, such as spins, loss of engine power, etc. will terminate the record attempt.

All tanks will be sealed by a DLRA official or designee for all qualifying and record runs. Vehicles competing in FUEL classes are exempt from this requirement. A technical station may be used to assure compliance of the gasoline/diesel fuel.

1.H RECORD BODY AND CLASS CERTIFICATION:

All record-breaking vehicles shall report immediately after their completed record run to the impound area, where inspections will be conducted by an appointed official for compliance with body class, and / or engine displacement, and / or technical requirements.

Record-breaking engines shall not be removed from the chassis prior to displacement inspection. Engine displacement measurement may be made with a DLRA approved displacement device if the engine displacement is not within 3% of the upper or lower cubic inch break for the class.

All other engines will be measured by direct measurement of bore and stroke or swept volume.

All components shall be available for inspection upon request. Provision to attach a wire seal to the engine shall be provided by the entrant. Following initial measurement and certification of the engine, a wire seal can be attached to the engine so that the engine need not be disassembled in the event additional records are set. Engine seals shall be good for one year, 365 days.

Record-setting engines which cannot be certified by direct measurement of the bore and stroke or with the DLRA air pump may require special tools. The entrant shall provide any special tooling required to measure an engine. The Technical

Committee will certify special tools for accuracy. Any engine that cannot be measured using the DLRA air pump or special tools will require disassembly for direct measurement of cubic inch displacement.
After a new record has been established and there is a question as to the legality of the vehicle the Technical Committee has the authority to place the record on hold or reverse the record.

An entrant that has qualified for a record is permitted to leave the event early for whatever reason,
providing that an engine seal has been fitted to the vehicle for later validation.

1.I PROTESTS:

All protests shall be made in writing using an official DLRA Protest Form. The completed protest form shall be given to the Rules Committee Coordinator or **Clerk of Course** or Race Director prior to record certification and before the end of Speed Week. All protests require a fee of $100.00. Engine protests that require a tear down shall require a $300.00 fee. This fee is refundable if the protest is upheld, and if the protest is denied the fee is forfeited to the DLRA Treasurer. Should an engine protest not be upheld the fee shall be awarded to the protested to cover the expense of tear-down. Protest forms will be available at the registration area.
Any deviation from the protest procedure will be considered as an invalid protest. If a protest is properly filed with the above official, the Technical Committee will rule on the protest within 30 days. If the protest is upheld, the vehicle may not compete

within the same class until modifications are made to bring the vehicle into class compliance.

1.J TROPHIES:

Trophies may be presented at the discretion of the DLRA.

1.K TIMING PLAQUE:

A DLRA timing certificate showing the fastest qualifying speed and a result sheet may be sent to all entries. Record setting entries may receive a timing certificate showing the record speed. All questions or requests for duplicate timing certificates should be directed to: DLRA Timer. – see Section 9

Dash plaques may or may not be available, following submission of the timesheet or certificate and correct funds.

1.L PARTICIPANT CONDUCT:

- *Road rules apply to all non-competition vehicles operating on the lake*
- Any participant who shows any signs of intoxication will be barred immediately from an event.
- A DRIVER/RIDER SHALL BE IN OR UPON THE RACE VEHICLE ANY TIME THE ENGINE IS RUNNING.
- Any reckless conduct by a race participant, e.g. driving a vehicle above walking pace in the pits or powering beyond the finish line will be referred to the Contest Board for action.
- Use of the racecourse before, during or after a meet without authorization is prohibited.
- A push truck is not allowed to use the course unless it is also the race vehicle.

- Riding in the back of an open pickup truck is prohibited. This rule will be strictly enforced.
- A FIRE EXTINGUISHER OF AT LEAST 2.5KG, a HYDROCARBON SPILL KIT, *SHOVEL, BROOM,* FLASHING *OR ROTATING AMBER OR ORANGE* ROOF LIGHT *(55-watt globe or Class 1 LED as a minimum)* AND AN OPERATIONAL CB RADIO *(UHF on Channel 10),* (handheld CB radios do not qualify due to limited range and power), SHALL BE IN USE IN ALL PUSH/RECOVERY/SUPPORT VEHICLES.
- *All competitors both car and motorcycle require a support vehicle and a team of at least one person to act as support for that competitor. Support vehicles and teams can be shared between competitors*
- Any display of unsportsmanlike conduct or disregard of rules and policies by an entrant towards an official, another competitor, or a spectator will result in disciplinary action.
- *For minor infractions, a yellow sticker will be attached to the vehicle and it will be stood down from competition for a minimum of one day.*
- *For serious incidents by a driver or member of crew, expulsion from the meeting or revocation of DLRA membership may result. The stewards are responsible for policing participant conduct. Decisions may be appealed to the contest board using the protest form.*
- *All persons using motorcycles for transportation at the event must wear a helmet. Failure to do so may result in expulsion from the event, or confiscation of the motorcycle for the remainder of the event.*

- *No Fluids or solids other than clean water are to be drained or dropped on the lake surface. No glycol-based coolant products are to be used by competition vehicles whilst on the lake surface because of its flammability and the damage possible to the salt. Redline brand 'water wetter' is permissible.*
- *ALL VEHICLES INCLUDING PUSH CARS ARE TO HAVE FULL LENGTH DROP SHEETS PLACED UNDER THE VEHICLE WHIST STATIONARY ON THE LAKE SURFACE*.
- *The use of a rope, chain or cable to tow a motorcycle on the lake is not permitted*.

1.M DRIVER LICENSING:

All drivers/riders shall have a current DLRA competition license or in the case of category E, a current and valid driver's license. These may be obtained by application to the DLRA office after meeting the requirements listed below. ALL DRIVERS SHALL COMPLETE & SUBMIT A MEDICAL INFORMATION FORM. A driver under the age of 18 shall have a signed Medical & Minor Release Form from a parent or guardian before he/she will be allowed to compete.

All new cars/drivers/riders or drivers/riders new to the car/course may be required to make runs at less than full throttle or less than full course length. Successful completion of the license requirements shall include, but not be limited to, starting line procedure, course navigation and shutdown procedure as determined by the Contest Board. ALL NEW DRIVERS/RIDERS SHALL ATTEND A ROOKIE ORIENTATION MEETING PRIOR TO THEIR FIRST COMPETITION RUN. *All rookie drivers will be limited to 125 MPH on their first run.*

The official conducting the meeting will issue a signed rookie sticker. Time and place for the orientation meeting will be announced at the start of the meet.

Experienced drivers/riders holding licenses in a slower category may qualify for the next faster category by satisfactorily completing one or more runs at a speed within the minimum and maximum for the next faster category. Licensing requirements are: a current and valid driver's license, a DLRA driver's license, and timing slip for the next higher category verified by the chief steward or his delegate, after viewing the licensing run.

For a licensing run to be valid, the starter must be informed that the run is for licensing purposes prior to leaving the start line. Where appropriate, the licensing run will include a parachute test. Where this applies, these will be conducted on category D passes and above

The categories are as follows:

Category E	Current and valid state driver's license
Category D	125 to 149 MPH
Category C	150 to 174 MPH
Category B	175 to 199 MPH
Category A	200 to 249 MPH
Category AA	250 to 299 MPH
Unlimited	300 MPH and faster

Car entrants can use Track 2 for license upgrades up to 150mph (Category D and below)
Car entrants must use Track 1 for license upgrades over 150mph (Category C and above)
Motorcycle entrants can use Track 2 for license upgrades up to 175mph (Category C and below)
Motorcycle entrants must use Track 1 for license upgrades over 175mph (Category B and above)
The entrant shall need to be within 5% (under or over) of license upgrade speed to have successfully attained the license.
Licenses will be periodically reviewed and reduced one license category for each three years of inactive competition. *Licenses may be obtained at the scrutineering tent during the DLRA Speed Week.*

1.N COURSE DAMAGE:

Any race vehicle or sub-component thereof such as header exit, total loss water system, non-pneumatic wheel/tire combination, etc. that has the potential or has demonstrated a tendency to damage the race course may be barred from competition until the vehicle or component is determined by the Contest Board to no longer create an unacceptable amount of damage to the race course.

1.O RETENTION OF VEHICLE AND/OR PARTS:

The participant hereby grants DLRA and its assigns the full and unconditional permission to collect and retain vehicles, parts of vehicles, equipment, or any other item used in conjunction with participation owned by or in the possession of participant, including such vehicles, parts of vehicles, equipment or any

other items which have been involved in accidents when DLRA determines in its sole and absolute discretion that such actions are necessary incident to the investigation of an accident, the inspection or testing of such vehicles, parts or equipment, or for any other purpose.

1.P TECHNICAL COMMITTEES:

Correspondence relating to rules or specific technical or safety questions shall be directed to the Car/Motorcycle Steward/Inspector or Technical Committee Steward, see Section 9.

1.Q SAFETY EQUIPMENT:

Additional safety equipment or safety enhancing equipment is always permitted. The levels of safety equipment stated in the Rule Book are the minimum prescribed levels for a particular competition class and do not prohibit the use of additional safety equipment. Participants are encouraged to investigate the utilization of additional safety devices for their application to the competition class entered. In the case of a dispute as to whether an item is safety-enhancing or performance-enhancing, the final decision will rest, solely and absolutely, with the DLRA.

1.R RULE DEVIATION PROCEDURE:

Any request for deviation from any rule contained in this Rule Book shall be submitted in writing to the DLRA Secretary or the Rule Book Coordinator, Section 9 *at least 45 days prior to an event*. The Technical Committee has up to 45 days to review any applications for a deviation from the Rule Book; therefore, requests should be submitted in a timely manner before the

vehicle is to run for full investigation and approval/disapproval. If the committee does not allow participation, the Rule Book Coordinator will inform the participant in writing and direct the Chief Inspector, Section 9, to make an appropriate notation in the vehicle Logbook. An entrant may appeal the decision of the Technical Committee to the DLRA Contest Board. A copy of the procedure is available from the DLRA office or in the Appendix Form B3 at the end of this DLRA Rule Book.

1.S PARTICIPANT COMMUNICATIONS:

In order to participate, non-English speaking drivers/riders shall have an interpreter fluent in English available at all times to ensure the drivers/riders understand all written and verbal communications while at the event.

1.T. Fuel storage and use

The DLRA is required to manage risks from hazardous chemicals to health and safety so far as reasonably practicable including those operating temporary fuel storage and handling systems at Speed Week.

These rules relate directly to the responsibilities of entrants and teams, which is a subset of the total response by the DLRA.

1.T.1 Speed Week Entry form attachment:

Each entrant must complete the "Hazardous Fuel Register" that is attached to the Speed Week Entry form. Only fuels that are stored and being used by the entrant need to be listed in the register. A Speed Week Entry form will be considered incomplete if a list of fuels detailed on the register is not supplied.

1.T.2 Signage:

Each competition vehicle must display a warning sticker affixed for the fuel type(s) being used.
Each entrants pit must display a warning sign for each fuel type being used or stored.
Each pit must display a "No smoking, No open flame" warning sign.
All fuel containers must have a relevant warning label attached.
One of each sign and one sticker for each fuel type listed on the entrants "Hazardous Fuel Register" will be supplied as part of the entrant's pack. Additional signs and stickers will be available for purchase from merchandise.

1.T.3 Containment:

Entrants must control ignition sources and accumulation of flammable and combustible substances.
Temporary fuel systems must be adequately protected from undesirable static electricity accumulation.
Ensure ignition sources are eliminated from any on-site hazardous area(s) during anytime a potentially explosive mixture of flammable vapor and air exists.
All fuel containers must be contained in bunds that have 100% capacity for the container.

1.T.4 Dispensing of fuel:

Devices used to dispense fuel must be consistent with Australian standards.
Entrants dispensing fuel must have ready access to a spill kit.

1.T.5 Fire Fighting Equipment:

Each entrant must provide suitable extinguishers for the fuel types that they are storing and using.

1.T.6 Dispensing of fuel at the Start Line:

Dispensing of fuel whilst under control of the starter or starters assistants or with-in the start line areas is strictly forbidden. There is a dedicated and defined re-fueling and servicing area at the back of the start line areas with appropriate ground protection and extinguishers that entrants and teams must use if required. Entrants attempting to dispense fuel within the start line areas will be instructed to immediately vacate the start line area.

1.T.7 Failure to comply:

Entrants found to be not complying with the rules will be instructed to comply. Multiple infringements will lead to disciplinary action by the Race Director.

1.U VOLUNTEERING

It is compulsory for all entrants to nominate and complete at least one volunteering task as part of their entry conditions for Speed Week.
A crew member or other person can substitute for the entrant. However, the obligation is on the entrant to ensure that the task has been signed-off as having completed.
Failure of an entrant to have completed at least one task will result in the entrant's speeds being withheld from the official results and will generate an additional fee to enter another Speed Week.

1.V RED AND YELLOW TAGS

Red and Yellow Tags are primarily used for both informational and safety purposes. The Red tags are also used for Infractions.

The Yellow and Red Tags will be issued on an as need basis at the discretion of an official. The Tag will be affixed to a vehicle with information pertaining to a vehicle's limitations, condition, requirements or infractions. Yellow and Red Tags shall only be removed at the direction of officials. Competitors that do not comply with these tagging requirements shall be subject to sanctions at the discretion of the racing officials.

SECTION 2 CAR COMPETITION SPECIFICATIONS

2.A ENGINES:

Any internal combustion engine using either a two stroke or four stroke Otto cycle or Diesel cycle may run in any category, except for Vintage engine classes hereinafter described. In XF, XO, XXF, XXO, V4 and V4F classes, non-production engines or after-market blocks (even though they accept production crankshafts, cams and cylinder heads) may not be used. All other engines that transmit the power through the wheels only may run in Ω Omega class. Only Streamliners and Unlimited Diesel Trucks may use more than one engine at the same time. For any engine to be considered for cubic inch (cc) requirements, the engine shall have contributed to the propulsion of the vehicle during the entire run**.** Reaction propulsion engines are prohibited.

The displacement of reciprocating engines will be computed by the following formula: bore x bore x .7854 x stroke x number of cylinders. For non-reciprocating engines, equivalent displacement (ED) will be calculated by the following formula: **ED=SV x2** where SV is the Swept Volume. The cubic inch to liter conversion shall be computed by the formula: cid/61.024 = liter.

ENGINE CLASS BREAK

Omega Engines using a thermodynamic cycle other than Otto

	Cubic Inch	**Liter Equiv.**
AA	501.00 cid and over	8.210 liters and over

A	440.00 to 500.99 cid	7.210 to 8.209 L
B	373.00 to 439.99 cid	6.112 to 7.209 L
C	306.00 to 372.99 cid	5.015 to 6.111 L
D	261.00 to 305.99 cid	4.277 to 5.014 L
E	184.00 to 260.99 cid	3.015 to 4.276 L
F	123.00 to 183.99 cid	2.016 to 3.014 L
G	93.00 to 122.99 cid	1.524 to 2.015 L
H	62.00 to 92.99 cid	1.016 to 1.523 L
I	46.00 to 61.99 cid	0.754 to 1.015 L
J	31.00 to 45.99 cid	0.508 to 0.753 L
K	up to 30.99 cid	0.507 L and under

In classes where not all engine breaks are available, the smallest displacement class allowed is open to all engine displacements that fall within it and below it.

2.A.1 VINTAGE ENGINES

Vintage engine classes listed below refer to "blocks or crankcases" and are intended to be representative examples of

those listed and recognizable as such. Vintage engine class competitors are required to use production blocks as specified. Blocks shall be limited to original factory production or factory authorized replacements and shall retain all original dimensions, excepting modifications involving intake/exhaust ports, cooling ports and in V4 engine classes only specialty head adaptation pursuant to the following criterion: Cylinder bore centers shall be maintained to within .150" of original design; crankshaft centerline to original deck height measurement shall be within .150" of original design; original deck material and thickness shall be maintained to within .150" of original design. The addition of a port divider to an OEM block or OEM cylinder head is not considered as adding a port. For V4 and V4F engines a Guide to Permitted/Prohibited engine block modifications is available from the Category Representative (Section 9) or on the SCTA-BNI website (www.scta-bni.org).

XF class consists of any production FORD/MERCURY, passenger car V-8 flathead engine, 1932 through 1953, up to 325 cid.

XO class consists of inline overhead valve (OHV), inline flathead and flathead V8 (except Ford & Mercury) and V-12 passenger car and pickup truck (or the same engine design family, Section 4.N) 1959-year design or earlier, up to 325 original cid. In the spirit of the class, XO engines shall be typical of those run at the Southern California Dry Lakes in the late 1940s and early 1950s. Examples include Chevrolet, GMC, Hudson, Packard, Buick, Lincoln and Cadillac and the Holden Grey engine.

XXF class is an XF engine, as described above, with a specialty cylinder head as described below.

XXO class is an XO engine, as described above, with a specialty cylinder head as described below.
A specialty cylinder head is fabricated billet stock, cast or a modified OEM head that has added ports. At least one valve per cylinder shall be in the head. All X class engines, as described above, which are over 325 cid, but less than 375 cid, shall be classified as either XXF or XXO. In addition, all other 1959 model year design or earlier non-Ford & Mercury flathead V8s, flathead and OHV inline engines, up to 375 original CID shall be classified as XXO. Specialty cylinder heads are NOT allowed in this instance.
Overhead cam specialty cylinder heads are not allowed in the XF, XO, XXF, & XXO engine classes.
XX/PRO class is limited to cylinder head port configuration as originally designed. This applies to the XXF and XXO engine classes.
V4 (Vintage Four) class consists of any pre-1935 American-made four-cylinder automotive production engine, up to 220 cid. Specialty heads are allowed.

V4F (Flathead Vintage Four) consists of any pre-1935 originally designed and American-made flathead four-cylinder automotive production engine, up to 220 cid. The engine shall have been produced as a valve in block engine; the camshaft must remain in the same location as produced (in the block). Only flathead-type cylinder heads (valve in block) are allowed. No specialty OHV or OHC conversion cylinder heads are allowed.

For reasons of economy and historical authenticity, vintage engine modifications and equipment used shall be restricted to older technology levels, so far as is practical. Accordingly, in classes XO, XF, XXF, XXO, and V4 & V4F, using Vintage bodies:

1. Turbochargers are not permitted
2. Computers (**2.Q**) are allowed for data collection purposes only
3. Electronic fuel injection prohibited
4. Any ignition system may be used and may employ a crank-trigger magnetic pick-up. Timing may be "pre-programmed" or "mapped" and apply a preset timing curve and rev-limiter. However, the ignition system shall not be "interactive". That is, the ignition system shall not make "variable real time" engine management changes while running based on sender or sensor inputs. For example, manifold pressure sensor, O2 sensor, knock sensor, wheel speed or gear change sensors, etc. Entrant is responsible for demonstrating compliance.

NOTE: See exception under Rules FOR Vintage Oval Track Category

2.B FUELS:

2.B.1 FUEL CLASSES:

In fuel classes, any approved liquid fuel may be used. Examples of approved fuels are: all alcohols and ethers, hydrogen, nitro methane blends, nitrous oxide, E85 and unapproved gasoline.

2.B.2 GASOLINE CLASSES:

The DLRA defines gasoline to contain no nitrogen bearing compounds, no propylene oxide, no ethylene oxide, and no

more than 10% methanol**.** The contest board may choose any test or combination of tests to assure that liquid fuels used in GASOLINE classes comply with these specifications. The tests may include but will not be limited to testing for the dielectric constant (D.C.) value, color comparisons, specific gravity, gas chromatography, mass spectrometry, and/or other testing methods. The addition of compounds containing oxygen, such as ethanol, methanol and other oxygenates may produce a mixture with a D.C. greater than 15.0 as measured with a Digitron FT-64 "DC Meter" zeroed on reagent grade, pure CYCLOHEXANE. 15.0 is the current DLRA acceptable dielectric ceiling. Most gasoline will check under this ceiling. At a non-"EVENT" gasoline meet, any gasoline that measures 15.0 or less on the D.C. scale and meets all other DLRA requirements will be allowed.

All liquid gasoline blends can be tested and certified to have a specific D.C., color, specific gravity, and other chemical properties. All gasoline that is tested and meets the DLRA definition of gasoline may be allowed on a case by case basis by the Contest Board. It is recommended that unknown gas be submitted to the DLRA and checked before use in competition. *E85 is not allowed in gas classes.*

If no EVENT DIESEL fuel is established, then the competitors may supply their own fuel and it shall be tested in the same manner as gasoline for additives. Water injection is allowed. The water tank shall be inspected and sealed prior to each record run.

Due to special considerations required using gaseous fuels, contact the Fuel Specialist for further information, see Section 9.

2.B.3 VINTAGE GASOLINE:

Allows for the provision of an alternate fuel and additive criteria for Vintage Engines (as described in 2.A.1 Vintage Engines, 7.J.4 Production Engines, 7.J.10 Class Vintage Gas) to better suit the needs of those vintage engines that have relied on lead in the fuel since they were originally manufactured. It will be referred to as E30 and will be a blend of a standard unleaded fuel and up to 30% Ethanol.

Vintage Engines will be permitted to use any upper cylinder lubricant additive that is commercially available in Australia.

2.B.3.1 ADDITIVES

Any substance, other than air, incorporated into the fuel subsequent to its final blending by the producing oil company is deemed to be an additive. Nothing in the foregoing shall be deemed to prohibit the addition of water, an approved lead replacement additive or a lubricant provided that such additive does not increase the octane or cetane rating, oxygen content or specific heat content of the fuel.
NOTE: Only Vintage Engines (as described in 2.A.1 Vintage Engines, 7.J.4 Production Engines, 7.J.10 Class Vintage Gas) may permit the use of alternate additives.

List of Approved Lead Replacement Additives:
(i) Valvemaster®,

(ii) Redline Lead Substitute®,
(iii) Penrite Valve Shield®,
(iv) PM 800 Fuel System Conditioner®,
(v) Elf Millesim®.

2.B.3.1 a Ethanol-blended fuel

May utilise a fuel stabiliser and corrosion inhibitor provided the same conditions apply as 2.B.3.1.

2.C FRAMES/CHASSIS:

Except where specifically forbidden by class rules, any design frame may be used. The frame design is subject to the approval of the Contest Board and shall be of sufficient strength to resist flex or twist. The burden of proof of the strength of the frame design lies with the entrant.

2.D SHOCKS:

A functional shock absorber is required for each sprung (moveable, non-fixed/rigid) wheel.

2.E DRIVE HUBS:

Any car equipped with a non-retained axle bearing (non-Hotchkiss type rear axle, front wheel drive hub and four-wheel drive hub) assembly shall incorporate an approved hub to prevent loss of a wheel in the event of rear axle failure. Semi or full floating rear axle assemblies, as used in most late model production cars, are sufficient. Late model GM type rear ends using stock ‘C’ clip axle retainers are NOT acceptable.

2.F TIRES:

The type of tire required in each class shall be governed by the current record speed in such class at the beginning of a meet as follows:

Up to 100 MPH: OEM tire, Q rated
Up to 115 MPH: OEM tire, S rated
Up to 120 MPH: OEM tire, T rated
Up to 130 MPH: OEM tire, U rated
Up to 150 MPH: OEM tire, H rated
Up to 200 MPH: VR and ZR rated tires

In excess of 200 MPH: Special tires for *LAND SPEED RACING* as designated by the manufacturer.

Open Record Classes: Tire requirements shall be determined by the speed in the next larger displacement class in which a record exists.

The use of any non-rated tire(s) such as implement, farm, aircraft or reproduction of a vintage automobile or motorcycle tire**/**rim, 17" drag race tires or any non-pneumatic wheel/tire combination (no rubber) shall be submitted for approval to the contest board in writing 45 days prior to an event. Any request for deviation from any rule contained in this Rule Book shall be submitted in writing in accordance with the RULE DEVIATION procedure, Section 1.R.

Any wheel/tire combination that has a square edge at the tread/sidewall, is strictly forbidden, see Section 1.N

Tubes are required except for racing tires expressly designed for use without tubes. It is mandatory that all entrants follow the tire manufacturer's air pressure recommendations. Caution should be exercised on excessive pressure.

Exceptions to any part of the foregoing may be granted by submission of a letter from the manufacturer stating the speed and pressure at which a tire may be run. No recaps are allowed. Tires are subject to inspection by the Contest Board at any time. Adequate tire clearance between the tires and body or chassis is required.
Metal valve caps shall be fitted to all tire valve stems. Tubeless tires shall use a metal valve stem.

2.G WHEELS:

ALL CLASSES UNDER 200 MPH: The smallest part of the hex of a lug nut shall be larger than the widest part of the female tapered seat of the mounting hole, i.e. A must be larger than B in the figure below. Lug nuts shall torque totally against a wheel's tapered surface. A minimum of 15.875 cm (5/8 in.) of the stud threads shall be engaged within the lug nut.
ALL CLASSES OVER 200 MPH and ALL VEHICLES with tires having a diameter of 73.66 cm (29 in.) or greater, or with wheels over 43.18 cm (17 inches) in diameter require:
- One-inch *hex*, (25.4 cm (1-in.) *hex*) lug nuts. A minimum of 15.875 cm (5/8 in.) of the stud threads shall be engaged within the lug nut.
-Wheels used shall be manufactured for racing or reinforced to include: - 5(minimum) *12.5mm* (**1/2-inch**) studs, (*not bolts*) center reinforced by welding the entire area of attachment between the rim and the center section on either the inside or outside of the wheel. *It is highly recommended that this is done by qualified wheel repairers/manufacturers)*

GENERAL: No closed end (Acorn type) lug nuts are allowed. Wire wheels designed for automotive racing applications such as Ridge or Dayton are allowed. Automotive OEM wire wheels are allowed only in classes less than 200 MPH, provided the center section is adequately reinforced. Motorcycle wheels not designed for automotive use are prohibited.
NON-FERROUS WHEELS: All non-tapered lug nuts that come in direct contact with the wheel shall have a 6.35 mm (¼ in.) thick steel retaining plate or large OD heavy gauge individual washers under all lug nuts. This does not apply to spindle mounted nonferrous wheels.
Magnesium wheels are not recommended and, if used, shall have an initial Zyglo certificate and stamp available. Zyglo inspections made with tires mounted are accepted. Wheels are to be re-inspected if any adverse condition arises. It is recommended that tire pressure used on two-piece wheels does NOT exceed 60 PSI or manufacturer's specifications.

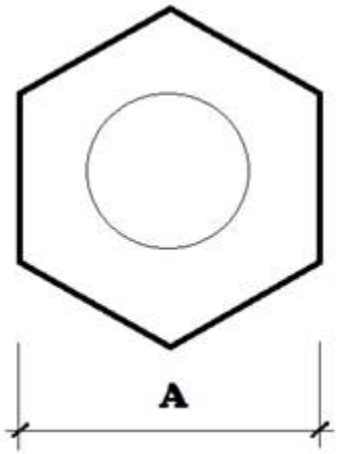

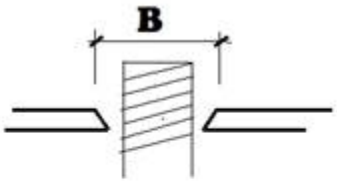

WHEEL COVERS: The prohibition against "wheel covering" in some class rules does not apply to "full wheel" discs, which are

legal in all categories if securely fastened to the wheels with six (6) or more machine grade screws or three (3) Dzus-type fasteners. Inner wheel discs shall be securely mounted to the wheel or axle. All hubcaps shall be removed.

2.H TREAD:

Tread is defined as the measurement from the centerline of one tire to the centerline of the opposite tire of paired wheels.

2.I PUSH BARS:

All cars incapable of starting under their own power shall be equipped with bumpers or push bars. Push bars shall not offer any aerodynamic advantage. No horizontal paneling is allowed between the rear of the body and the bumper/push bar. No towed starts are permitted from the starting line without special approval. All cars shall be equipped with a push bar or a readily available tow attachment in the event the vehicle must be removed from the course.

2.J BALLAST:

Ballast may be used in all categories. Ballast shall be securely mounted, bolted to the frame or the frame structure. The use of hose clamps, wire, strapping, tape, and tie wraps, etc. for securing weight or ballast is prohibited. Ballast shall not be used to streamline the vehicle, see Section 4.CC. It is recommended that ballast be mounted as low as practical.

2.K APPEARANCE:

All vehicles entered in an event shall be maintained so as to present a neat appearance. All white, silver, or unpainted vehicles shall show a contrasting color on the body. All owners, drivers, and crews are responsible for the maintenance of their

pit area and will be expected to present a neat and respectable appearance.

2.L NUMBER/CLASS DESIGNATION:

Competition numbers will be assigned as the membership number of the vehicle owner and/or driver. Numbers assigned to another member may be used by negotiation with the membership number holder concerned. In case of dispute, the number reverts to the membership number.

Numbers shall be a minimum of 7.62 cm (3in.) high. Only the current class designation shall appear on the race vehicle adjacent to the number and shall be a minimum of 3.81 cm (1.5in.) high. The sale of a race vehicle does not transfer the number to the new owner. Changes shall be reported to the Competition/Entry Numbers Coordinator, see Section 9.

2.M CANOPIES:

Canopies enclosing the driver are permitted in Streamliner and Lakester classes only. The canopy shall be securely closed in competition by the employment of a mechanical fastening. The steering mechanism can move, but the canopy shall not be attached to the steering mechanism. Canopies shall be capable of being opened from both the inside and outside without the use of tools. Latches shall be clearly marked on the outside of the vehicle.

2.N REPLICA BODIES AND PANELS:

Replicas of original stock bodies and panels may be used in all (except special construction) categories provided they are exact dimensional replicas of factory production units that are otherwise acceptable in the category.

2.O TARPAULINS AND TONNEAU COVERS:

Cockpits may be covered with any nonflammable material and may be flexible or rigid unless otherwise stated in the class rules. No sharp or protruding edges are allowed. Tarpaulins, rigid or non-rigid, on pickup beds shall be aligned with and no higher than the sides of the bed.

2.P FOUR-WHEEL DRIVE:

Four-wheel drive systems are allowed only in Special Construction Category and Production Category where the competing vehicle was originally equipped with Full Time four-wheel drive.

2.Q COMPUTER:

Vehicles may be equipped with a computer which affects engine operations ONLY, e.g., timed fuel injection, etc., except in Vintage Engine classes, see Section 2. A.1.

2.R DATA RECORDERS:

Entrants in all classes may use a data recorder.

SECTION 3 TECHNICAL SPECIFICATIONS & REQUIREMENTS

3.A DRIVER'S CLOTHING:

All drivers shall wear a driver's suit, gloves, head sock or helmet skirt, and boots. Protective underwear is highly recommended. All items shall be in clean and serviceable condition. It is advisable not to wear synthetic clothing material under the driver's suit. All drivers' suits shall be SFI certified and have the SFI rating tag attached.

3.A.1 Minimum Driver's Suit Requirements:

Type of Vehicle

Blown front engine cars over 175 MPH

Suit	SFI 3.2A/20
Boots	SFI 3.3/15
Gloves	SFI 3.3/15
Head sock	SFI 3.3

All other cars over 175 MPH

Suit	SFI 3.2A/15
Boots	SFI 3.3/5
Gloves	SFI 3.3/5
Head sock	SFI 3.3

All vehicles under 175 MPH

Suit	SFI 3.2A/10 or /5 with full Nomex underwear
Boots	SFI 3.3/5
Gloves	SFI 3.3/5
Head sock	SFI 3.3

. ALL DRIVERS SHALL WEAR A SFI 3.3 HEAD SOCK OR a SFI 3.3 HELMET SKIRT.

3.A.2 Driver's Helmet:

All drivers/riders shall wear a full-face helmet with face shield bearing a Snell Foundation tag reading Snell SA2010 (FIA 8860-2009) or Snell SA 2015 (FIA 8860-2015). Competitors are encouraged to upgrade to the now available Snell SA2015 or FIA 8860-2015 standard helmets if making a new purchase. Helmets with a Snell rating label of 2005 expired on January 1, 2017, helmets with a Snell rating label of 2010 will expire on January 1, 2022. No open face helmets will be allowed. Helmets will be visually inspected at least once each year. Helmets shall be undamaged and in serviceable condition. Eyeglasses worn under the helmet shall be shatterproof. All cars and motorcycle streamliners require SA rated helmets.

3.A.3 Driver's Helmet Support:

A forward, side and rear helmet support system shall be used in all vehicles.

Forward movement: All cars and motorcycle streamliners shall have an engineered and tested SFI spec 38.1 type head and neck restraint system.

Lateral movement: The seat or roll cage structure shall provide restriction to lateral head movement of less than 5.08 cm (2 in.) per side inclusive of structure deflection, and at a minimum extend to the forward most portion of the helmet see Section 3. B.1.

Rear movement: see Section 3.C.

3.B ROLL CAGES:

ALL CARS IN COMPETITION SHALL BE EQUIPPED WITH A FULL ROLL CAGE.

ALL DEVIATIONS TO ROLL STRUCTURE RULES SHALL BE SUBMITTED TO THE CONTEST BOARD 45 DAYS PRIOR TO THE EVENT FOR APPROVAL.

Low carbon (mild) steel tubing is recommended for the construction of roll cage structures. Threaded pipe, pipefitting, lap weld pipe, magnesium or aluminum is not permitted. All bolts shall be 9.525 mm (3/8 in.) minimum diameter and a grade 5 minimum.

All bolted structures shall have at least two bolts (180 deg. apart) through support pads and roll cage structure brace connections.

On unitized construction and monocoque cars, the roll cage structure and braces shall have 6.35 mm (¼-in.) thick support pads on the top and bottom of the floor (or sill, in a sandwich construction) and shall be of sufficient area to support an impact load equal to the weight of the car. For cars weighing less than 1134 kg (2500 pounds) these pads shall have a perimeter of at least 45.72 cm (18 in.) (i.e., 10.16 cm x 12.7 cm) (i.e., 4 in. x 5 in.) and cars over 1134 kg (2500 pounds) shall have at least 55.88 cm (22 in.) perimeter (i.e., 12.7 cm x 15.24 cm) (i.e., 5 in. x 6 in.).

3.B.1 Roll Cage:

Minimum requirements for the roll cage structure and the roll cage structure braces are 41.275 mm (1-5/8 in.) O.D. round steel tubing with a minimum 3.048 mm (.120 in.) nominal wall thickness or E4130 chromoly tubing with a minimum 2.413 mm

(.095 in.) nominal wall thickness, securely mounted, gusseted, and braced within 127 cm (5 in.) of the top of the roll cage structure. Square or rectangular tubing may be used in roll cage structures if both leg dimensions meet or exceed 41.148 cm (1.62 in.) and the wall thickness is 3.048 mm (.12 in.) or greater. ALL ROLL CAGE STRUCTURES SHALL BE DESIGNED TO PROTECT THE DRIVER FROM ANY ANGLE, INCLUDING THE BOTTOM AND THE REAR. All roll cages for G, H, I, J & K classes may be made of round steel tubing not less than 3.81 cm (1-1/2 in.) O.D. x 2.413 mm (.095 in.) nominal wall thickness. Vehicles in classes where the existing record exceeds 175 MPH shall use the larger tube minimum requirements.
A minimum four (4) point roll cage is required if the front hoop is continuous and directly connected to the lower frame rail. A minimum five (5) point roll cage is required if the hoops and bars are mounted to the shoulder bar, see Figure 1a.

SECTION 3.B WILL BE RE-WRITTEN FOR THE 2022 RULEBOOK AND INCLUDE MORE INFORMATION FOR MONOCOQUE CHASSIS CARS AND NEW DIAGRAMS. IF YOU ARE BUILDING A CAR NOW, STRONGLY RECOMMEND THAT YOU CONTACT THE CHIEF CAR INSPECTOR OR THE TECHNICAL CHAIRMAN.
See Section 9 for contact details.

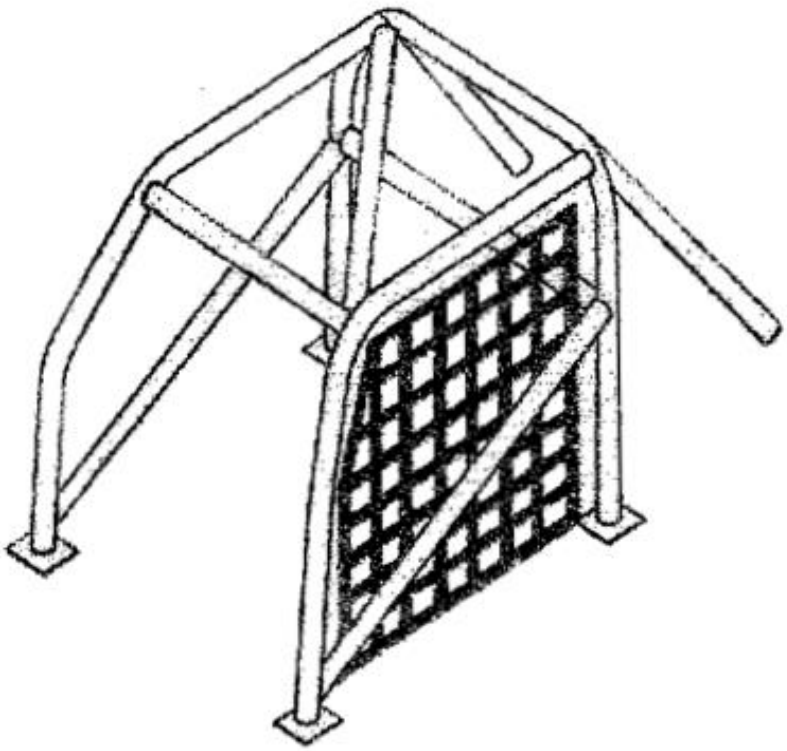

Figure 1a

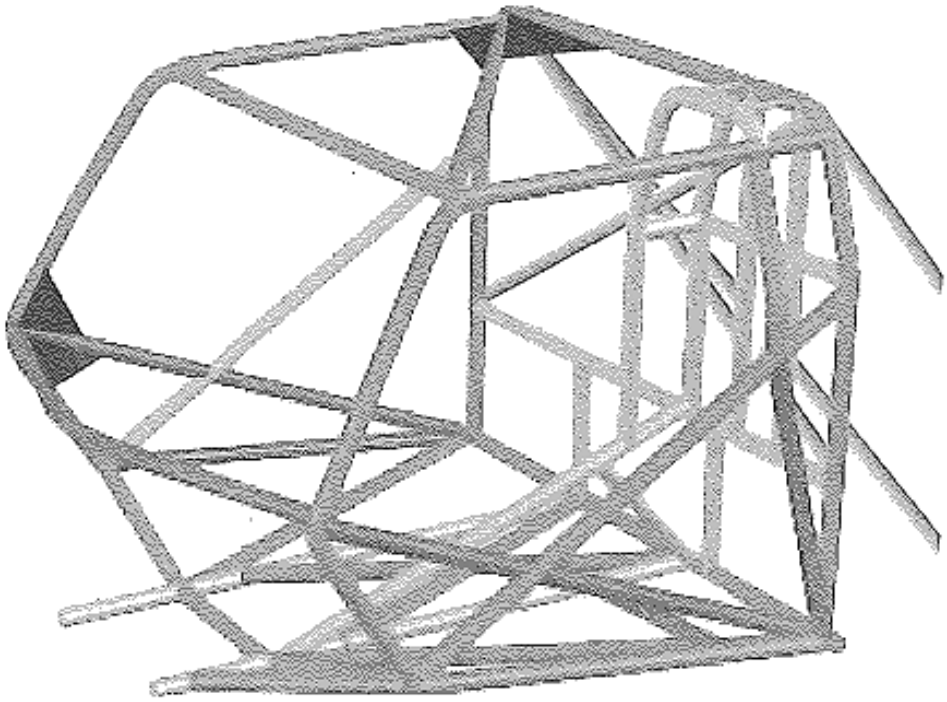

Figure 1b

This is an example of a stock bodied car roll structure with additional floor cross braces

Gussets are required at tube junctions of hoops and shoulder rail. Gussets shall either be made of plate, tubing or fabricated from sheet. Plate gussets shall be made from be made from mild steel, 3.175 mm (.125 in.) minimum thickness and 10.16 cm (4 in.) per side, preferably stitch welded on the outside of the tube junction. Tube gussets shall be a minimum of 2.54 cm (1 in.) O.D., round steel tubing with a minimum 3.048 mm (.120 in.) nominal wall thickness although it is recommended that tube gussets be of the same O.D. and wall thickness as the main roll cage material. Tube gussets shall be constructed such that the outside edge of the tube gusset be at least 10.16 cm (4 in.) from the tube junction point, see Figure 3. Gussets are required

at all shoulder bar attachment points. Grinding of welds is NOT permitted, see Figures 2. Gussets may not be used as aerodynamic aids and shall not exceed 15.24 cm (6 in.) in length without prior technical review and board approval.

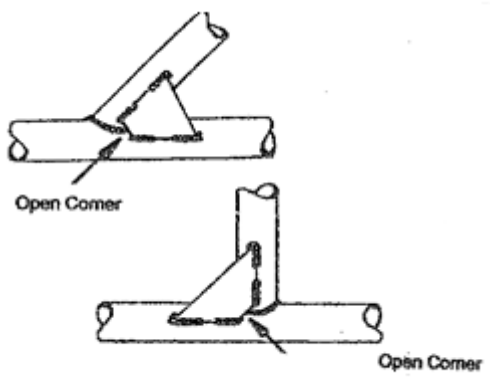

Figure 2

The front hoop of the roll cage shall be at least 76.2 cm (3 in.) in front of the driver's helmet while the driver is in his normal driving position. A lateral movement structure, see Section 3.A.3 shall be constructed such that the helmet cannot exit the outer plane of the roll cage, see Figure 3.

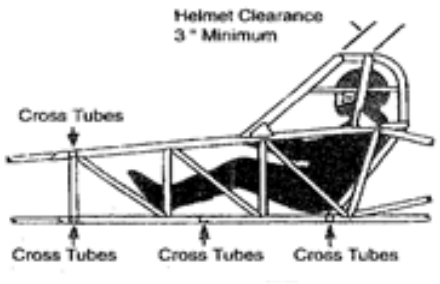

Figure 3

This is an example of the side view of the roll structure in a special construction vehicle**.**

Deviation requests shall include strength calculations, drawings and/or pictures showing all physical dimensions of the roll cage bar structure and adjacent frame. All roll cage structures shall be designed to encapsulate and protect the entire driver's area from impact. THE ROLL CAGE AREA IS CONSIDERED TO EXTEND FROM ABOVE AND BEHIND THE DRIVER'S HEAD TO IN FRONT OF THE DRIVER'S FEET AND INCLUDES BOTH SIDE AND BOTTOM PROTECTION. See figures 4A, 4B and 4C.

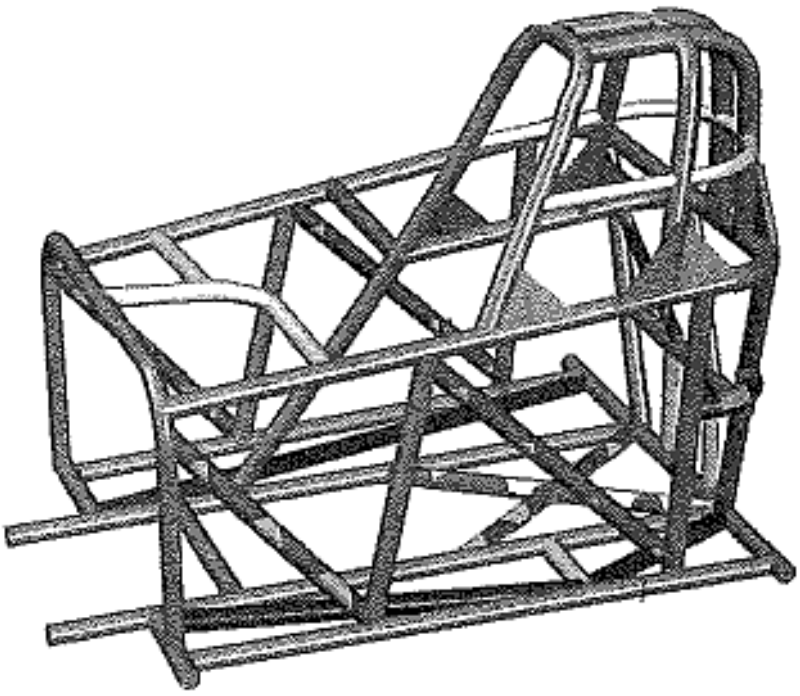

Figure 4A
This is an example of a roadster or glass bodied structure

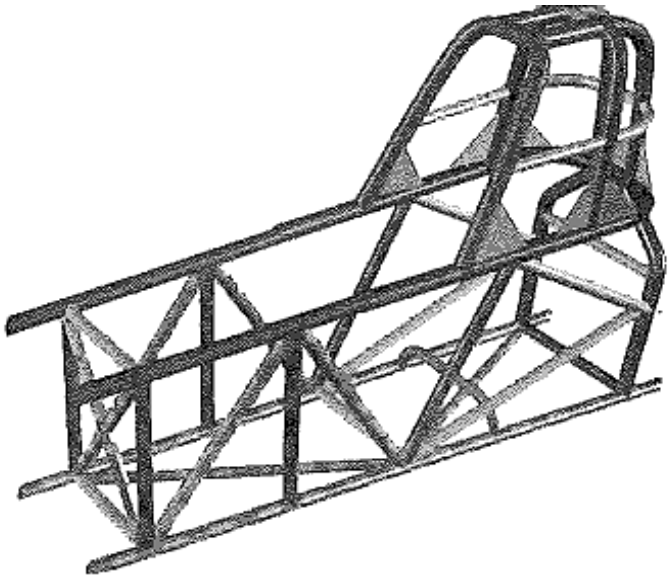

Figure 4B

This is an example of a special construction streamliner/ Lakester roll structure

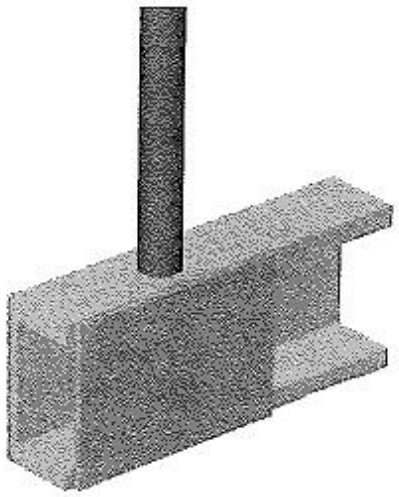

Figure 4C
This is an example of frame reinforcement chassis or frame

3.B.2 Roll Cage Padding:

Padding meeting SFI SPECIFICATION 45.1 for round tubing and SFI SPECIFICATION 45.2 for flat plate construction is required in the proximity of the driver's helmet.

3.C HEAD REST:

A padded headrest shall be installed in all vehicles to prevent whiplash. All drivers shall have the padding within 5.08 cm (2 in.) of the back of the helmet.

3.D DRIVER RESTRAINTS

3.D.1 Seats:

All vehicles shall use a seat designed for racing. The seat shall be constructed of a metal or alloy sufficient to retain the driver under high "G" loading. Composite seats must be pre-approved

by the technical committee. No “plastic” seats will be allowed. The seat shall be securely fastened and have a maximum of 2.54 cm (1 in.) padding. Sprung or compressible seats are prohibited. Seats shall be securely installed and braced to prevent rearward collapse**.**

3.D.2 Seat Belts:

Minimum 5-point seat belts meeting SFI specification 16.1 or SFI specification 16.5, quick release, competition type seat belts and shoulder harness are mandatory in all categories. All seat belt and shoulder harness installations shall be mutually compatible, originally designed to be used with each other. Crotch straps are required in all categories. All belts shall be in good condition and have a manufacturer’s tag with a legible date not more than 5 years old on the label or an SFI tag with a “Valid Until” date. The Valid Until date will be accepted up to 3 years after the date on the tag (i.e. a Jun 2019 valid date will be accepted until Jun 2022). It is recommended that seat belts be upgraded every two to three years. When arm restraints are worn with a belt system that utilizes a “latch lever” with a built-in latch lock, a protective cover shall be installed to prevent the arm restraint from accidentally releasing the latch lever, tape is not sufficient as protection.

SEAT BELTS AND SHOULDER HARNESSES SHALL BE INSTALLED TO THE MANUFACTURER’S SPECIFICATIONS AND IN COMPLIANCE WITH THE HELMET SUPPORT SYSTEM REQUIREMENTS WITH SPECIAL CONSIDERATION GIVEN TO THE SHOULDER BELT INTERACTION WITH HANS TYPE DEVICE, SFI 38.1.

Seat belts shall be securely fastened to the frame, cross member, or reinforced mounting points so that fittings are in direct line with the direction of pull. Participants are cautioned that the usual “factory” mounting through the floorboard is inadequate and will not be permitted without additional reinforcement. Mounting shall be accomplished with a minimum of grade 5 bolts. Under no circumstances are bolts to be inserted through the belt webbing. The shoulder harness shall be mounted in a manner as to prevent slipping off the driver’s shoulders, see figures 5, 6 & 7.

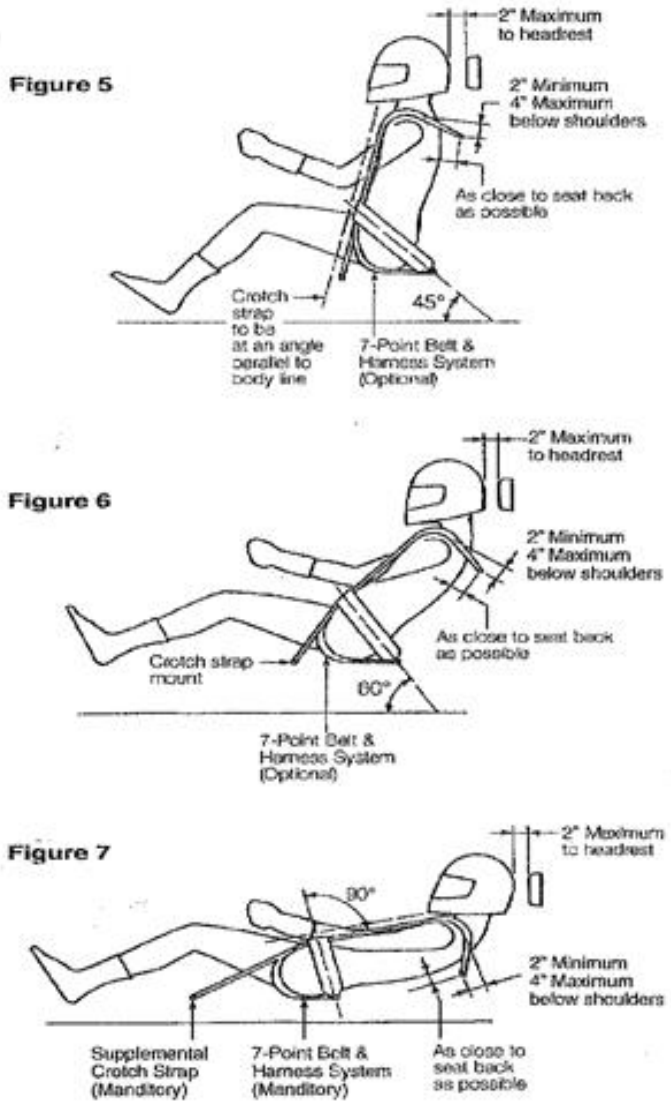

Figure 5, 6, 7

Figure 5, 6 & 7

A supplemental strap to prevent the driver from sliding up into the roll cage shall be added to vehicles where the driver is in a reclining position, see Fig. 7. In a vehicle with minimal cockpit

room, consideration should be given to ensure the seat belt tighten pull is to the center of the vehicle, see Figure 8.

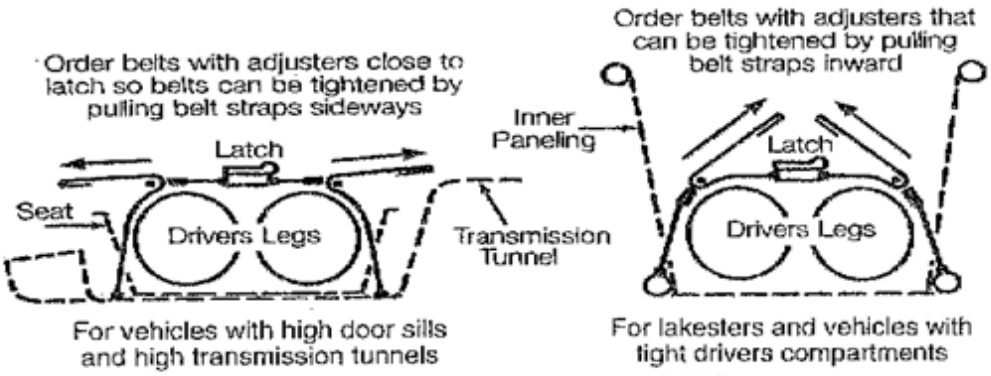

Figure 8

THE SEAT BELT CLINCHING MECHANISM SHALL NOT BE ON TOP OF EITHER THE SFI TAG OR A MANUFACTURER'S LABEL. IF THE BELT CANNOT BE INSTALLED IN THIS MANNER, THE TAG SHALL BE RELOCATED SO AS TO BE VISIBLE.

NOTE:

ADDITIONAL SFI INFORMATION CONCERNING PROPER SEAT BELT INSTALLATION MAY BE FOUND AT: http://www.sfifoundation.com/SeatbeltGuide06-05-12.pdf OR ON http://www.scta-bni.org.

3.D.3 Arm/Leg Restraints:

SFI specification 3.3 arm restraints with a manufacturer's date of 2006 or later are required in all vehicles.

IN ADDITION: ALL ARM RESTRAINT HARDWARE MUST BE OF A SINGLE PIECE MANUFACTURE. I.E. NO TWO PIECE OR WELDED "D" RING STYLE ADJUSTERS. ADJUSTABLE TETHERS SHOULD USE A THREE BAR SYSTEM SIMILAR TO THAT USED IN LAP BELT ADJUSTERS. NON-SEWN IN RESTRAINTS SHALL HAVE A TIGHT FIT AROUND THE NARROWEST PART OF THE ARM. ALL ARM RESTRAINTS MUST BE DEMONSTRATED TO BE EFFECTIVE.

Legs shall be restrained by tethers, panels, bars or net. The restraint system shall be capable of preventing the driver's arms/legs from extending outside the roll structure and/or frame rails in case of an incident that includes a body panel separation. Participants are cautioned that all controls be mounted as close to the steering wheel as possible to keep all arm restraints as short as possible. Arm restraints shall be combined with the driver belt system such that the arm restraints are released in conjunction with driver's belts. The restraint system shall be one of the various types available on the market.

Restraint nets are acceptable as the primary leg restraint system. All mounting tabs/brackets shall be mounted inside the outside plane of the roll structure and shall not be exposed to the track surface in case of an incident or come into contact with the driver's body. All nets shall be mounted in such a manner that they fall from the top and out of the driver's way. All nets shall be mounted so that the driver can exit the car without assistance. The manufacturer shall perform any modifications to window nets.

NOTE: In all categories when a coupe, sedan, or pickup body is used the restraint systems shall be effective without the door

installed. To meet this requirement, it shall be necessary to have arm restraints and a “full” door net or a combination of restraint systems that would be the equivalent to a “full” door net. All door net mounting bars shall not be flexible and shall be attached with a positive locking system, e.g. seat belt hardware.

All Special Construction vehicles shall include an inner liner or system of roll cage members for driver protection in the event of body panel destruction or separation. For a restraint system to be deemed acceptable, no part of the driver shall extend outside the inner plane of the roll cage structure.

3.E DRIVER’S COMPARTMENT:

All driver compartments, driver’s positioning, and surrounding structures shall be designed to support good forward vision. The driver shall be able to exit the driver’s compartment with ease. All doors, hatches, and canopies shall be able to be opened from both inside and outside the vehicle without the use of tools. Non-OEM latches shall be clearly marked on the outside of the vehicles.

On closed cars, door locks and steering wheel locks shall be rendered inoperative. The driver shall be able to reach all switches, valves and levers while strapped securely in the seat, shall be able to exit the Drivers Compartment with ease and shall demonstrate the above by performance of a ‘Bail Out’ (4. NN). The driver shall be fully suited up, wearing a Head & Neck Restraint and helmet. The ‘Bail out’ (4. NN) shall be noted in the Logbook. Cars with front engines shall have the rear of the flywheel housing forward of the driver’s knees. The driver’s compartment shall be free from sharp edges, protrusions,

brackets, etc. within close proximity of the driver. All enclosed driver compartments shall be equipped with a forward-pointing fresh air intake or breathing system directed to the driver and have adequate venting to carry away fumes. COMPRESSED OXYGEN BREATHING SYSTEMS ARE PROHIBITED. All air breathing and cooling systems that supply air to the driver must have fire retardant protection on the hoses that supply air. A cross-member running below the driver's body, no smaller than the roll cage diameter applicable to the class, shall protect any portion of the driver's body that extends below the main frame rail.

All drivers' compartments shall not be open to the exterior of the vehicle or track surface such that the driver is potentially exposed to dangers such as fire or debris as well as dust. A rear floor or aft bulkhead is required in all vehicles where applicable.

3.F FIREWALL:

A full firewall to provide a watertight and flame-resistant barrier between the engine and the driver is required in all categories. All non-production firewalls shall be made of metal with a minimum thickness of 1.524 mm (.060 in.). A thickness of 2.413 mm (.095 in.) is recommended. All holes shall be sealed.

3.G SECONDARY FLOORING:

All cars with modified floor pans shall have secondary flooring of metal in the driver's compartment capable of retaining the driver and appendages in the event of the loss of the modified floor/belly pan(s). The secondary flooring must be securely attached to the frame or cross-member. Expanded metal will be accepted if sufficiently rigid. Except in Vintage Oval Track

Class, secondary flooring shall be no lower than the bottom of the frame plus the thickness of material used.

3.H TRANSMISSION SHIELDS:

All cars with automatic or planetary type transmissions shall be equipped with a ballistic transmission blanket or approved shield. It is recommended that the transmission blanket/shield meet SFI specification 4.1.

3.H.1 Transmissions:

Any type of transmission may be used in any class. Automatic transmissions shall have a positive reverse lockout to prevent accidental reverse gear engagement.

3.I FUEL SYSTEMS:

The complete fuel system shall be securely mounted. Plastic fuel lines are not permitted. A metal screw type clamp shall be on each connection of rubber or steel-braided fuel line. All components of the fuel system shall be isolated from the driver's compartment or pre-approved by the Technical Committee. All fuel lines in the area of the clutch, flywheel or drive train shall be run through heavy steel tubing or outside the frame rail, regardless of the presence of a scatter shield. All fuel tanks shall be vented. Fuel tank vents shall be provisioned to eliminate spillage in the event of a rollover. All fuel tanks shall be isolated from the driver's compartment and protected in the plane of the blower drive, if used. Nitrous Oxide cylinders or any other type of oxidizer cylinder are considered the same as fuel tanks and shall not be mounted in the driver's compartment.

3.I.1 Fuel Shut-off:

All cars with other than stock fuel system shall have a fuel shut-off within the driver's reach. Electric fuel pumps shall have a switch in the circuit to disable pump operation. All electric fuel pumps shall have an inertial switch *and an oil pressure switch in the circuit to disable pump operation in the event of an incident*. All rotating fuel shut-off valves SHALL have a positive stop to prevent reopening of the valve.

3.I.2 Nitrous Oxide Systems:

Nitrous Oxide bottles and lines are considered a portion of the fuel system and governed by all fuel system requirements. Nitrous Oxide bottles shall be securely mounted. Bottle mounting by hose clamps alone is not sufficient. Vehicles with Nitrous Oxide systems shall be visibly identified as such and the location of the bottle(s) shall be indicated on the exterior of the vehicle. The Nitrous Oxide bottle(s) shall be removed when competing in gasoline classes.
THE NITROUS OXIDE BOTTLE PRESSURE RELIEF VALVE SHALL BE VENTED TO THE OUTSIDE OF THE VEHICLE BY A RIGID LINE.

3.I.3 Diesel Fuel Systems:

Diesel engines with mechanical injectors shall be equipped with a shut off valve that will eliminate the fuel supply.

3.J THROTTLES:

All cars shall be equipped with a redundant, self-closing throttle control with two (2) adequate return springs. There shall also be a positive stop to prevent sticking in "over-center" position. Accelerator pedal toe straps are required except on OEM cable or hydraulic throttles.

IT IS RECOMMENDED THAT PLASTIC-LINED THROTTLE CABLES BE AVOIDED.

3.K BATTERIES:

All batteries shall be properly secured with metal framework and fasteners. Plastic tie-downs are not allowed. Both wet cell and dry cell batteries may be mounted in the driver's compartment, however wet cell batteries must be sealed in an acid spill-proof box.

All vehicles shall be equipped with a main battery disconnect switch. The disconnect switch or a positive mechanical control (cable or rod) for the switch shall be located on the front or rear of the vehicle, operable externally and be clearly marked.

3.L STEERING:

All steering systems shall be gear or link type. The steering wheel shall have adequate clearance. The steering column shall be rigidly mounted. All moving parts shall operate freely without excessive play. The steering linkage shall have sufficient clearance between the body and the chassis. Steering shall be assured by at least two (2) front wheels.

It is recommended that all steering system welds be visually inspected on a frequent basis. Competitors may wish to periodically qualify exceptionally critical welds (king pin bungs, radius rod brackets, spring perches, etc.) by means of x-ray or magnaflux. If a potential problem is observed in the inspection process, the Technical Committee may require the competitor to provide an x-ray or magnaflux certification.

All spherical ends (i.e., Heim) used in steering systems shall not be constructed of aluminum and shall have washers with a

larger OD than the Heim to retain the joint should separation occur (solid-type Heim joints are required). All bolts used in steering linkage shall be at least grade 5. For vehicles with long steering shafts, as used on rear-engine Streamliners and Lakesters, the shaft shall be collapsible or have a secondary steering shaft stop installed. Non-metallic steering wheel hub release mechanisms are not allowed.

The use of wagon wheel type steering on front-wheel drive vehicles is prohibited. It is recommended that the wheel offset of front-wheel drive vehicles be designed to minimize steering pull with loss of traction or drive line failure. Cable steering systems as used on the Ford Pinto are not allowed.

3.M PARACHUTE:

An approved parachute is required on all cars that qualify for the long course (175 MPH). Vehicles that exceed 300 MPH shall be equipped with two (2) independent parachute systems. Parachutes shall be securely mounted to a suitable cross-member that is at least 1-inch diameter or ½ inch radius. All parachutes shall be opened during inspection. Special attention shall be given to the length and mounting point of the parachute tether line. The manufacturer's recommendations should be followed regarding parachute size, mounting, etc. On those vehicles required to have parachutes, the deployment of the parachute/s is at the driver's discretion, consistent with safe and efficient event and vehicle operation.

Parachute failures, such as the parachute pack not opening, parachute canopy not opening, parachute separation from the vehicle, handling problems as a result of parachute opening, etc., and require a re-inspection.

ALL VEHICLES HAVING A PARACHUTE FAILURE SHALL RETURN TO THE INSPECTION AREA WITH ALL COMPONENTS OF THE PARACHUTE SYSTEM. A NOTATION WILL BE MADE IN THE VEHICLE LOGBOOK DESCRIBING THE FAILURE AND SOLUTION.

3.N PARACHUTE RELEASE:

Any car equipped with a parachute shall have the parachute release mounted in such a fashion that the driver may actuate it under emergency conditions while strapped securely in the seat wearing all safety equipment. All non-manual parachute release systems must also have a redundant, manual release as a backup that meets the above requirements.

3.O FLYWHEELS, FLYWHEEL SHIELDS and BELLHOUSINGS:

All cars, including rear-engine cars, with non-automatic transmissions, shall be equipped as follows:

- Flywheels: No cast iron/cast aluminum flywheels shall be permitted.
- Flywheel Shields: Flywheel shields shall be SFI specification 6.1, 6.2 or 6.3 depending on the application. A DLRA-approved flywheel shield, made from 6.35 mm (¼ in.) thick steel, providing 360 deg. coverage and constructed in such a manner to provide retention of clutch and flywheel assembly parts may be used in the event that an aftermarket flywheel shield is not available. On cars where no aftermarket flywheel shield is available, and on smaller cars with limited space to install either SFI specification or DLRA-approved flywheel shield, a SFI specification 4.1 blanket specifically manufactured for the particular application may be used as a flywheel blanket

(shield). All such uses shall be submitted to the Car Technical Chairperson in accordance with Section 1.P, Technical Committees: and must receive prior approval before use.

- Bell Housings**:** Cars utilizing bell housing engine mounts only (Corvair, VW, etc.) shall provide some additional method of retaining the engine in the car.

3.P EXHAUST SYSTEM:

Exhaust systems may be modified in all categories. Systems shall be constructed in such a way that exhaust is directed past or away from the driver, fuel tanks, tires, and course. Individual stacks shall be connected by welding or other means near the free end so as to prevent destruction due to vibration.

3.Q FIRE EXTINGUISHING SYSTEMS:

All cars and enclosed motorcycles shall have a minimum of one driver-controlled fire extinguishing system using a minimum of 2.5KG. of extinguishing agent designed and applied to function as driver protection. Approved agents include, DuPont FE36, and certain AFFF systems including Cold Fire 302, ESS Foam, Firefox Gem Foam, Halotron or other *non*-Halon replacement certified by the manufacturer for use in a confined space. Dry chemical and CO2 may be used in the engine compartment only. The application and installation shall be in accordance with the manufacturer's recommendations for the size and shape of the driver's compartment. The discharge rate should be designed to allow sufficient protection for the time it will take the car to stop from speed.

All electrical and fuel systems must shut down totally on activation of the fire suppression system to help prevent re-ignition sources

NOTE: Care and consideration shall be taken to prevent driver suffocation. Fresh air venting or breathing systems may be necessary.

ALL CARS and MOTORCYCLE STREAMLINERS, 0-200MPH shall have a total of 5KG of fire extinguishing agent onboard. At least 2.5KG must serve the driver/rider area and the additional 2.5KG may serve the engine and/ or a combination of driver/rider and engine areas. Both areas shall be served via fixed nozzles. Acceptable agents in the engine area include CO2, foam, *non*-Halon replacement or dry chemical. The engine system shall generally include 2 nozzles directed toward the header/oil pan area or be installed according to manufacturer's recommendation. Only Halon replacement agents may be used in the driver's compartment. See above paragraph.
ALL VEHICLES OVER 200 MPH, because of the additional time required to stop, shall be equipped with additional extinguishing agent (in addition to the 5KG minimum) which is designed and fitted for driver protection. The installation should be commensurate with driver compartment size and the speed of the vehicle. Contact a reputable safety equipment manufacturer for installation advice.
Minimum Agent Requirements:

0-200 MPH	5KG min.	Driver & engine
201+ MPH	5KG min.	Over 2.5KG for driver

NOTE: The amount of required agent should not be confused with total bottle weight.

All push/recovery/support vehicles are required to have a minimum of one 2.5KG portable fire extinguisher with a minimum rating of 10-B:C.
All competition vehicle extinguishing system control valves or cable/linkage to control them shall be within the reach of the driver while strapped in position. The valves shall be designed to remain open once actuated. All agent lines and nozzles shall be metal and securely mounted. Extinguishing agent cylinders within the driver's compartment shall be mounted with a system more substantial than hose clamps alone. The use of hose clamps as a primary mounting system is prohibited.
A current inspection/filling certification (no more than 24 months old) for each agent bottle shall be visible to the technical inspector without removing the bottle.
NOTE: Care and consideration shall be taken to prevent driver suffocation. Fresh air venting or breathing systems may be necessary.

NOTE: Agent delivery lines are subject to dust and moisture clogging. Participants are responsible to assure that the fire system is full and operable before each event. Frequent clearing of the lines is recommended. Aqueous foam systems require that the nozzles be directed appropriately so that the

agent does not impede the vision of the driver. Questions concerning fire-extinguishing systems may be directed to the Fire Extinguishing System Specialist see Section 9.

3.R COOLING SYSTEM:

All liquid cooling systems utilizing non-braided circulation lines shall have metal clamps at each connection. The use of plastic tubing in a cooling system is not allowed. No flammable or combustible coolants are allowed. *All glycol-based coolants are banned. Redline brand 'water wetter' is allowed.*

3.S DRIVE LINES:

Open drive lines in the driver's compartment shall be equipped with a protective covering. In all cars with a driveshaft, see Section 4.II, there shall be a 360-deg. metal sling (at least 6.35 mm (¼ in.) x 25.4 mm (1 in.)), attached securely and mounted in the front 25% of the driveshaft to prevent dropping or excessive whipping in the event of breakage of driveshaft or universal joints.

Overrunning clutches (freewheeling) in drivelines are permissible in all categories. All traction bars and trailing links shall have a metal sling near the front attaching point with a minimum of 6.35 mm (¼ in.) diameter. Torque tube (early Ford type) drivelines are exempt from the driveshaft sling requirement. If the rear wishbones are split and attached to the frame rails to act as traction bars, a 6.35 mm (¼ in.) minimum metal sling is required.

3.T FRONT END AND SUSPENSION:

All front end and suspension fasteners shall be aircraft type "self-locking" nuts or have wire or keys appropriately placed to prevent them from coming apart. All spherical ends (e.g., Heim joints) used in suspension systems shall not be constructed of aluminum and shall have washers with a larger OD than the joint to retain the joint should separation occur (solid type Heim joints are required). Un-sprung A-arm front ends are prohibited. No front suspension shall have more than 20 deg. of steering caster unless steering stops are used. Steering stops shall be installed to prevent wheel "flop over" and the tires from contacting any other component when the steering is in the full-lock position.

3.U WINDOWS AND WINDSHIELDS:

All non-stock windows and windshields shall be made of shatter-resistant plastic, such as polycarbonate (Lexan), and shall provide 120 degrees of adequate vision forward. On all open body cars, a windshield is recommended, but shall not restrict driver entrance or exit. In all classes where a headrest fairing is permitted, the windshield may sweep around the driver's head and connect to the fairing on either side (refer to 3.E Driver's Compartment rule concerning sharp edges).

All windshield wiper blades and arms shall be removed. On front and rear windows, retaining tabs or straps are required over 175 MPH.

Vehicles with T-Tops or moon roof panels shall have the panels retained with tabs or straps.

All vehicles in classes where the record is less than 200 MPH shall have SAFETY film on BOTH SIDES of all non-laminated

safety glass windows or replace the windows with polycarbonate material.

All other glass, such as Glass headlights must also be covered in Safety film.

Common window tint will NOT be allowed as a substitute for SAFETY film.

All vehicles in classes where the record is over 200 MPH shall have all non-laminated windows constructed of polycarbonate material.

All vehicles with 'frameless' side windows, regardless of speed, must have all non-laminated windows constructed of polycarbonate material

Additional bracing must be installed to prevent window blowout or collapse.

The original roll up window hole may be closed in when replacing the frameless glass windows with polycarbonate.

3.V HOODS:

Hoods are required in all categories (except Special Construction Category) and shall be secured by metal fasteners, leather or webbing straps. Production hood latches are not sufficient unless the hood opens from the rear. Hood side panels (such as found on '29 Ford) may be removed. Early type hood hold-downs (spring type) are inadequate. Visible hood release fasteners, (such as hood pins and Dzus fasteners) do not require identification. All other releases (such as factory releases) shall be clearly marked.

3.W BRAKES:

Adequate brakes are required in all classes. Brake controls shall be within the driver's reach while the driver is securely strapped in the seat. No front wheel only brake systems are allowed**.**

3.X BLOWER RESTRAINT SYSTEM:

SFI-type blower restraints shall be used on all vehicles using positive displacement blowers. Vehicles where the driver's body is within the rotational plane of the blower shall have the blower contained within an SFI-type restraint bag.

3.Y OIL TANK VENTING:

Any oil tank within the driver's compartment shall be vented to the outside and lower portion of the vehicle.

3.Z DZUS FASTENERS:

Dzus or quick-action panel fasteners are permitted to secure body panels, however they must be covered with mesh or fabric reinforced tape to stop loose fasteners from falling out. All holes specifically provided for Dzus fasteners must be covered by mesh or fabric reinforced tape as well to confirm that a fastener has not been lost during a run.

SECTION 4 DEFINITIONS

The following is a list of terms used by the DLRA Contest Board and their meanings:

4.A AIR DUCT:

Aerodynamic pressure relief systems in which air is ducted from one point to another. Air ducts may pierce, but shall not extend past exterior bodywork, and shall not be utilized to eliminate a prominent feature (e.g. a fender crown shall not be removed to provide a duct opening). Air ducts shall originate and exit in the rear 50% of the vehicle body and shall not be directed to or away from wheel wells. Construction shall be of nonflammable materials.

4.B AIR INTAKES:

Ducted airflow devices which are meant to provide combustion air directly to the engine. Air intakes shall not originate below the original stock location and, on rear-engine cars, the air intake shall originate in the rear 50% of the body. Air intakes protruding from the front of the car (other than OEM) shall not exceed 309.67 sq. cm. (48 sq. in.) of frontal area and shall not extend more than 30.48 cm (12 in.) and shall not taper, except in classes where forward streamlining is allowed. Carburetors that protrude through the car's hood shall be covered with a flash shield.

4.C AIR VENTS:

Aerodynamic pressure relief systems in which no air ducting is utilized. Louvers and tail light removal fall under this definition.

4.D AUTOMOBILE:

For classification purposes, an automobile is a land vehicle propelled by its own means, run on at least four (4) wheels, not aligned, which shall always be in contact with the ground. Steering shall be assured by at least two (2) front wheels. The automobile shall be propelled by at least two (2) wheels. One pair of wheels shall be on the same transverse centerline.

4.E AUTOMOTIVE PRODUCTION:

Any component which is offered for sale by a recognized automotive manufacturer to the general public as original equipment or accessory to a production automobile is considered automotive production. A production rate of at least 500 vehicles of the same model and year for sale to the general public is considered to meet the requirement of a production automobile.

4.F BALLAST:

Material added to the vehicle for the purpose of additional weight only. Heavy components which serve another function will be identified by that function.

4.G BELLY PAN:

A skin of material used to cover the undercarriage of a vehicle. The skin shall cover at least 51% of the undercarriage of the vehicle to be considered a belly pan for classification purposes. DRAIN HOLES ARE REQUIRED IN THE ENGINE AREA.

4.H BOBBING:

Removing material from a body component in such a fashion as to reduce the overall height of the component without changing the original shape at either the top or bottom.

4.I CHOPPING:

The reduction of the overall height of a closed top vehicle, where the original general top contour is maintained. Materials can be added or removed to maintain the original shape. Size and base positioning of pillars must be in original OEM locations. Category specific requirements must be met.

4.I.1 CHANNELING:

The lowering of the body over the frame rails.

4.J CONTEST BOARD:

The DLRA Committee plus additional personnel appointed by the DLRA President.

4.K CONTOUR and BODY RELATIONSHIP:

Contour is the configuration of external sheet metal and windows. Removable trim, lights, floorboards, and interior sheet metal are not part of the contour. All body panels and windows shall be mounted in their original relationship as manufactured unless otherwise allowed. Moving body panels and windows from their original relationships to control air flow, tighten gaps, altering the original panel shape and filling seams with caulking or foam tape is considered streamlining.

4.L COVERED WHEEL:

For classification purposes, a wheel will be considered covered if 120 deg. of the tread circumference is shielded from the air stream by the covering.

4.M DRIVER/RIDER COMMITTEE:

This Committee will consist of at least two Board members and a minimum of 3 non-Board members and will be responsible for licensing review and related matters.

4.N.1 ENGINE SWAP:

An engine swap is defined as the use of an engine from an engine design family that was not available as a factory or dealer installed option for a given vehicle year is used.
An engine design family is defined as engines which are made with the same basic material, have the same bore centers, crankshaft supports, deck height, cam location, head mounting, bellhousing and engine mount patterns, etc. All OEM parts shall fit the block without modification.
The use of an OEM or aftermarket replacement engine block from the same design family is not considered a swap. “Crate engines” are not considered engine swaps. Direct replacement aftermarket engine blocks are not considered engine swaps (Dart, World Products, etc.) if they meet the above engine swap design definition criteria.

4.N.2 PORT CONFIGURATION:

Port Configuration is defined as the factory original port location in relation to the
adjacent port or ports.
Example: A 1970 small block Chevrolet cylinder head has a port configuration as follows;
X I I X X I I X, with the “X” being exhaust port and “I” being intake port locations. For
this same basic engine, you could purchase a set of Chevrolet SB2 type cylinder heads over

the counter (but were never factory installed) which has the following port configuration; I
X I X X I X I. When factory port configuration is required in the Category being run, the
second port configuration would be considered a violation.

4.O FIREWALL: (NON-PRODUCTION)

A metal barrier between the engine and driver compartment, see Section 3.F.

4.P FLOORBOARDS:

Floorboards are defined as paneling in the lower portion of the car exclusive of the engine compartment. Floorboards shall be mounted above the frame or in the stock location for the body style and year of the vehicle. Floorboards shall be inside or over all suspension and drive line components, well fitted and securely attached with all holes sealed.

4.Q GASOLINE:

Gasoline, as produced, is a mixture of hydrocarbons which may include some SCTA acceptable oxygenates. **See Section 2.B.**

4.R HOOD SCOOPS:

A hood scoop is a functional air intake device used on full body, un-blown vehicles, where allowed. No part of a forward-facing hood scoop can extend forward of the leading edge of the hood, be more than 27.94 cm (11 in.) above the surface of the hood at the centerline or extend past the trailing edge of the hood more than 27.94 cm (11 in.) at the centreline. Clearance between the scoop and the windshield must be a minimum of 6.35 mm (¼ in.). On rearward facing scoops they cannot be more than 27.94 cm (11 in.) above the surface of the hood at

the centerline. They can extend past the trailing edge of the hood, but the rear must be totally open and clearance between the scoop and the windshield must be a minimum of 50.8 mm (2 in.). No foam sealing is allowed between the scoop and windshield. On rear engine cars, the hood scoop may be built on the engine cover. The scoop shall not extend more than 27.94 cm (11 in.) above the surface of the roof and no further forward than the front edge of the back window.
Vehicles using a top-mounted blower may have a hood scoop which is no taller than 50.8 mm (2 in.) above the fuel injector or carburetor(s). The scoop may extend to the rear no further than the back of the blower and terminate at that point. The scoop cannot extend to the windshield and will not exceed a total height of 27.94 cm (11 in.), measured at the centerline of the hood. Hood scoops for blower types other than top-mounted may not exceed the specifications for unblown applications as noted in the paragraph above.

4.S INCIDENT REVIEW COMMITTEE:

This Committee will consist of two committee members and appointed non-committee members to review and report to the Contest Board on a specific incident, as requested by the Contest Board.

4.T TECHNICAL INSPECTION COMMITTEE:

A group of DLRA members who conduct all the technical inspections at any DLRA competition event. The Contest Board chooses the membership of this Committee.

4.U LIMB RESTRAINT:

A restraint system capable of containing the driver's arms and legs within the inner plane of the roll structure in case of an incident that includes vehicle body panel separation.

4.V OPEN CAR:

Any car which may be entered and exited without unfastening, unlatching or moving any panel. All open cars as described, except in Special Construction Category, SHALL have the driver's line-of-sight above the body. No periscopes allowed.

4.W OPEN WHEEL:

A wheel configuration in which no portion of the car's bodywork intrudes upon the inside plane of the tire.

4.X ROOF RAILS:

A piece of metal angle, perpendicular to the roof, and a minimum of 12.7 mm (½ in.) high to a maximum of 19.05 mm (¾ in.) high. The roof rail shall be attached to the roof on each side as close to the outside edge as possible. The roof rails shall be parallel from the front to the rear. The roof rails may extend from the base of the windshield to the base of the rear window. Roof rails shall be installed on any coupe, Sedan, Ute or Truck when the existing class records exceeds 200MPH. Roof rails will not be considered for classification purposes.

4.Y SECTIONED:

The removal of a given horizontal width of a body panel and rejoining the body panel to achieve a lower height.

4.Z SECONDARY FLOORING:

Metal sheeting in the driver's compartment for the purpose of retaining the driver and appendages in the event of step pan or

belly pan tear away. Not required in cars with floorboards in the cockpit.

4.AA SET BACK:

The feature of a car which is represented by the formula D/WB where D is the distance measured from the front spindle transverse centerline to the front-most sparkplug hole or centerline of the front most cylinder on compression ignition engines and WB is the wheelbase.

4.BB WINDSHIELD POST MOUNTING SUPPORT:

An upright bar, post or support structure to which the windshield posts are bolted, i.e., 1928-1931 Ford roadsters have this piece, 1926-1927 and 1932-1934 Ford roadsters do not.

4.CC STREAMLINING:

Any device which has the apparent purpose of directing, limiting, or controlling air flow around or within the car and is not a part of the original body will be considered as streamlining.

Removal of certain devices may also be considered streamlining; axle and header configuration will not. Any streamlining devices will be considered as part of the body for classification purposes, see Section 2.J. The types of streamlining devices listed below are allowed in some classes:

4.CC.1Air Dams and Splitters:

OEM or fabricated devices installed below the front bumper used to inhibit and direct airflow from under the vehicle. An air dam may be attached to the leading edge of the bumper and

not be considered to be extending forward of the front bumper so long as no point of the air dam projects more than 1/4" forward of the original contour of the leading edge of the front bumper when viewed from above.
Air dams and splitters can be set inward from the front bumper but cannot extend above or beyond the original contour of the leading edge and sides of the front bumper, see 4. JJ for the definition of a bumper. Both can extend rearward to the leading edge of the front wheel well. Splitters are allowed as long as they follow the same contours requirements as an air dam. Bodies cannot be cut away to accommodate air dams or splitters.

4.CC.2 Axle Fairing:

Streamlining devices attached to the axle to direct airflow around axle configuration only.

4.CC.3 Belly Pan:

A skin of material used to cover the undercarriage of a vehicle, see Section 4.G.

4.CC.4 Headrest Fairing:

Bodywork, on an open car, see Section 4.V, which extends rearward for the purpose of preventing wind buffeting of the driver. The fairing shall not be wider than the roll cage at any point, nor extend past the rearmost part of the body.

4.CC.5 Parachute Pack Mounts:

A parachute pack mounting plate must not extend more than 1" past the edge of the Parachute bag on all sides. The maximum length on all sides supporting the mounting plate shall be 6". If two chutes bags are mounted side by side on the

same plate the max space allowed between them is 4". No more than two chutes can be mounted on one mounting plate. If the pack mount/mounts have to be more than 6" off the body a tube structure must support the mounting plate/plates.

4.CC.6 Parachute Mounting Tubes:

Parachute mounting tubes may extend no further than 15.24 cm (6 in.) behind the rearmost part of the original body and must not be faired into the body. The maximum length of any side of a tube extending from the body is 30.48 cm (12 in.). These dimensions are dependent on specific class rules.

4.CC.7 Skirts:

Streamlining devices added to the lower portion of the body for the purpose of controlling airflow under the body. The skirt must be vertical, rigidly mounted and may be a maximum of 12.7 mm (½ in.) thick. The skirt shall be in a single plane, mounted to the bottom of the body but cannot modify the contour of the body. The skirts may extend from the centerline of the front axle to a vertical plane at the rearmost point of the original bodyline.

4.CC.8 Spoiler:

A device on the upper portion of the body for the purpose of spoiling lift. The spoiler shall be mounted in the rear portion of the body behind the rear axle centerline. Two different implementation approaches **IF ALLOWED** can be used but not mixed together, see Figures 9 and 10. Should a competitor wish to use a different approach to a spoiler implementation, that approach must be submitted to the Technical Committee for review and consideration prior to the race event.

Implementation Approach One:

The spoiler must have a continuous surface no wider than the outside edge of the rear tires. The maximum chord measured on the top surface at the center of the car can be 25.4 cm (10 in.) A 1 in. tab or hinge can be added to the leading edge of the spoiler for mounting purposes only. A spill plate on each side of the spoiler is allowed and must be mounted parallel to each other vertically and horizontally. Additional intermediate plates are allowed along the spoiler between the end plates. Care should be taken that the bottom of the intermediate plates, if used, does not interfere with parachute operation. The intermediate plates may be no larger than the end plates. They can extend no further forward than the rear axle centerline. Spill plates are allowed to be no more than 20.32 cm (8 in.) above and below the forward mounted position of the spoiler when the spoiler is parallel with the ground and extend no more than 5.08 cm (2 in.) past the end of the spoiler. Gurney flaps are allowed but cannot extend above or behind the spill plates. The design is allowed to fill in the horizontal gap between the leading edge of the spoiler and the body with a plate no farther forward than the centerline of the rear axle.

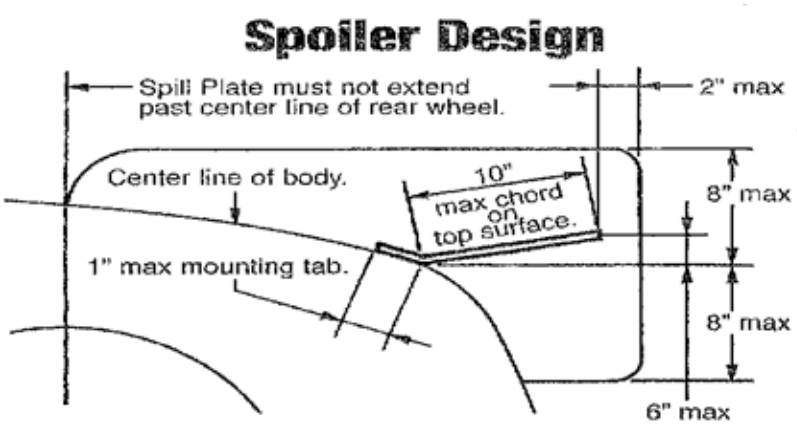

Spoiler Implementation Approach one

Figure 9

Implementation Approach Two:

The spoiler must have a single continuous surface with no side plates. Maximum spoiler chord measured on the top surface is 25.4 cm (10 in.) from the trailing edge of the body. A 2.54 cm (1 in.) tab can be added to the leading edge of the spoiler for mounting purposes only. The ends of the spoiler must follow the contour of the body and shall not extend beyond the outside edges of the body at any point. When laid flat the width of the spoiler can be a maximum of no more than 40.64 cm (16 in.) wider than the outside plane of the rear tires. No other aero devices or Gurney Flap are allowed with this design.

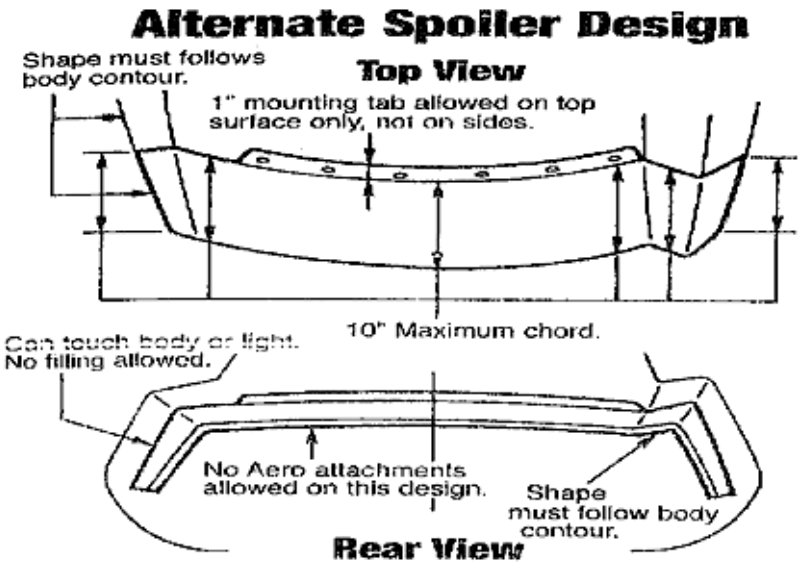

Spoiler Implementation Approach two

Figure 10

4.CC.9Strake:

Strake is an aerodynamic device located under the vehicle in the rear portion of the vehicle that is intended to control and directs air flow under the vehicle. The strake may extend no further back than the trailing edge of the body and be perpendicular to the ground. The strake may be located no further out than the inner plane of the rear tires and may extend no further forward than the firewall or body cowl line, whichever is further forward. Strakes that are OEM and do not meet this definition are allowed.

4.CC.10 Trip Fences:

A device in the upper forward part of the body for the purpose of tripping the laminar layer.

4.CC.11 Vortex Generators:

Sharp edged devices placed on the body for the purpose of creating flow vortices.

4.CC.12 Wings:

Wings are a special class of aerodynamic effect devices intended to provide down-force, which are allowed ONLY on Streamliners, Lakesters, Modified Roadsters, Competition Coupes and Production bodies which had the wing as an option. For classification purposes, the wing is not considered as part of the body.

4.DD STREET EQUIPMENT:

That equipment required for legal street operation in most states. It includes but is not limited to high and low beam headlights, horn, taillights, stoplights, signal lights, and an exhaust system capable of being muffled. Decals are not acceptable as meeting the headlight and taillight requirements.

4.EE STEP PAN:

A step pan may enclose the area from the aft-most portion of the firewall to a line 25.4 cm (10 in.) forward of the rear axle centerline and shall not be lower than the frame at any point plus the thickness of the material used.

The step pan shall be flat, parallel to the ground (side to side) and no wider than the frame rails. A box may be constructed to enclose the portion of the transmission which protrudes through the step pan. The box shall be rectangular in design, flat on the bottom, covering only the exposed portion of the transmission. The box shall not be tapered in any way; maximum clearance around the transmission shall be 2.54 cm (1 in.). Chassis cross-members are not considered as part of the

frame for purposes of this rule. The transition at the rear of the step pan to the floorboard shall occur at a 45 deg. or steeper angle to be exempted from the definition of a belly pan.
NOTE: A step pan shall not be considered as part of a belly pan for classification purposes.

4.FF SUPERCHARGED:

For purposes of classification, blown (supercharged) will be an artificially aspirated engine with a mechanically driven supercharger and/or exhaust-driven turbocharger powered by the primary engine. The supercharger or turbo charger must pressurize the intake system above atmospheric pressure**.** This will also include systems such as turbo compounding. All other engines (normally aspirated) will be classified as un-Blown.

4.GG TECHNICAL ADVISORY COMMITTEE:

A group of competitors, manufacturers' representatives and others appointed by the Contest Board to review and update the competition rules of DLRA and to make recommendations of a technical nature to the Contest Board.

4.HH WHEELBASE:

All vehicles shall have at least two parallel axles. The wheelbase is the distance measured from the centerline of the rear axle to the transverse center line of the front spindles. The wheelbase shall be equal on the left and right sides of the vehicle to within 2.54 cm (1 in.).
Streamliners are exempt from this rule.

4.II DRIVESHAFT:

A driveshaft is defined as the connection from the engine or transmission to the rear drive unit in a conventional front-engine/rear-drive configuration.

4.JJ BUMPER:

A bumper is a metal device that bolts to a car's chassis to provide collision protection and may be removed in some classes. A bumper is typically 40.54 cm (16in.) – 50.8 cm (20 in.) above the road surface. Bumper covers (thermoplastic body pieces on cars starting in 1978) are considered to be part of the body. The bumper cover cannot be removed or altered in shape and contour if not allowed by class rules. For the purposes of streamlining, any fascia covering the primary bumper bar ceases to be part of the bumper once above or below the primary impact absorbing region.

4.KK OEM Body Kit:

Body kits produced by a recognized automobile manufacturer for a specific year vehicle must be used as a complete package. 500 kits for the same model were/are required to be for sale to the general public meets the production requirements. Mixing and matching pieces from different years or not using the complete kit will be considered streamlining.

4.LL COMPUTER:

A computer shall be defined as any electronic device (i.e. ECU, ECM, etc.) that activates any function of, or in any way affects, the operation of, the engine based on measurement, sensing, processing, etc. of any data related to the performance of the engine.

4.MM COWL:

The cowl area is defined as the portion of the body bounded by the front fenders, the base of the windshield and the rear edge of the hood as measured at the centerline of the vehicle.

4.NN BAIL OUT:

A "Bail Out" is the process where a driver is fully suited with jacket, pants, boots, gloves, helmet and
head & neck restraint. The driver will be belted in place and demonstrate the location of all switches and levers. The driver is required to perform an exit from the race vehicle. The "Bail Out" must be done smoothly and with ease. The success of the "Bail Out" is at the discretion of the Technical Inspector and will be noted in the Logbook. More than one demonstration may be required.

SECTION 5 CAR CLASSES

The car classes are divided into six general categories: Special Construction, Vintage, Classic, Modified, Production and Diesel Truck. The general rules for each category apply to all classes in that category.

5.A SPECIAL CONSTRUCTION CATEGORY

This category is the pinnacle of the straightaway racer's art. It contains three main groups. In the automobile group are the unlimited Streamliners and open-wheeled Lakesters with a 4+ wheel configuration and in the motorcycle group are the Streamliner and Streamliner Sidecar classes. These classes allow both blown and un-blown, gas or fuel engines. These are all-out straightaway vehicles with non-stock engine blocks allowed, (with the exception of specific Vintage engine classes). Innovation is encouraged, within the rules. Modified production bodies are forbidden. Four-wheel drive is allowed in the automotive group only.

Vehicles in this category must have fire doors or panels in the body, clearly marked to allow access to the engine compartment and chassis. The fire doors/panels must have a minimum diameter of 4 inches. Competitors have until January 1, 2018 to comply with this provision.

It is strongly recommended that all new vehicles be submitted for a pre-event inspection by appointment with the Technical Committee. If not practical because of distance, photographs and drawings may be submitted to the Technical Committee Chairman, see Section 16.

5.A.1 Streamliner - /BFS, /FS, /BGS, /GS, /DS

This class is for the all-out land speed record car. Cars in this class shall have at least four wheels, but they need not be arranged in a rectangular configuration. The design of the body is restricted only to the extent that at least two (2) wheels shall be covered. Turbochargers, superchargers and any choice of fuel are allowed in Diesel Streamliner class.
Engine classes allowed are: Ω Omega, AA, A, B, C, D, E, F, G, H, I, J, K, XO, XF, XXF, XXO, V4 and V4F

5.A.2 Lakester - /BFL, /FL, /BGL, /GL

Special cars constructed in such a way that there is no streamlining, fairing or covering of the wheels and tires. Tread width is optional so long as no part of the body or axle fairing is wider than the narrowest inner vertical plane of the tires. Wing struts shall be within the inner vertical plane of the rear tires. The wing shall be mounted at least 30.48 cm (12 in.) above the top of the rear tire as measured from the lowest part of the wing. Front wings shall be no wider than the inner vertical plane of the narrowest set of tires.
Minimum wheelbase is as follows:

Classes AA, A	279.4 cm	(110 inches)
Classes B, C, D	266.7 cm	(105 inches)
Classes E, XXF, XXO	254 cm	(100 inches)
Classes F, XF, XO, V4, V4F	241.3 cm	(95 inches)
Classes G, H	228.6 cm	(90 inches)

Classes I, J, K	203.2 cm	(80 inches)

Engine classes allowed are: Ω Omega, AA, A, B, C, D, E, F, G, H, I, J, K, XF, XO, XXF, XXO, V4 and V4F

5.A.3 Electric Vehicle - /E

This class is for vehicles using electric power as the sole means of propulsion. The vehicle shall be wheel driven. THE BODY CONFIGURATION IS UNLIMITED. The vehicle and driver shall meet all technical and safety regulations based on the speed of the existing record. The class will be based on vehicle weight less driver. The entrant shall provide a weight certificate for classification purposes.

Class I	Less than 500 kg	Under 1099 lb.
Class II	500-1000kg	1100-2200 lb.
Class III	Over 1000 kg	2201 lb. and over

5.A.4 Turbine Vehicle - /T

This class is for vehicles using turbine power (external combustion) as the sole means of propulsion. The vehicle shall be wheel driven. THE BODY CONFIGURATION IS UNLIMITED. The vehicle and driver shall meet all technical and safety regulations based on the speed of the existing record. The class will be based on vehicle weight less driver. The entrant shall provide a weight certificate for classification purposes.

Class I	Less than 500 kg	Under 1099 lb.
Class II	500-1000kg	1100-2200 lb.
Class III	Over 1000 kg	2201 lb. and over

5.A.5 STEAM VEHICLE - /S

This class is for vehicles using steam power as the sole means of propulsion. The vehicle shall be wheel driven. THE BODY CONFIGURATION IS UNLIMITED. The vehicle and driver shall meet all technical and safety regulations based on the speed of the existing record. The class will be based on vehicle weight less driver. The entrant shall provide a current weight certificate for classification purposes.

Class I	Less than 500 kg	Under 1099 lb.
Class II	500-1000kg	1100-2200 lb.
Class III	Over 1000 kg	2201 lb. and over

5.B VINTAGE CATEGORY

This category is specifically intended for the lovers of antique iron. Although fiberglass and aluminum bodies are allowed, the body shall be an exact replica of an American production automobile body except for the Vintage Oval Track class. No modification is allowed to the body proper from the stock

firewall location back and the window down, and only limited modifications are allowed to the hood and top.
This category is organized into three groups: ROADSTERS, from the highly modified to the street roadster; VINTAGE COUPES AND SEDANS, which are special vintage classes for the Modified Category; and VINTAGE OVAL TRACK, a special class for oval track and speedway vehicles with pre-1948 designed engines.
Except for the Vintage Oval Track vehicles, only automobile bodies produced by an American manufacturer prior to 1948, at a rate of 500 or more yearly, or exact replicas of such bodies are allowed. Tops may be chopped, but no other alteration to the contour or size of the body shell is allowed except as specifically allowed in the class rules. Wheel wells may be filled but not deepened. Rear axles may be narrowed as long as no part of the tires extends within the body shell.
TURBOCHARGERS ARE NOT ALLOWED ON VINTAGE CLASS ENGINES COMPETING IN VINTAGE BODY CLASSES, see Section 2.A.1.
The minimum tread dimensions for all Vintage Category vehicles are 111.76 cm (44 in.) front and 127 cm (50 in.) rear. Modified Roadsters are exempt from the front tread requirement. The minimum wheel diameter for all Vintage Category vehicles with the exception of /VOT is 35.56 cm (14 in.).
Bodies shall be mounted in a conventional manner and all stock panels shall be mounted in their original relationship to each other. No fenders are allowed on MODIFIED, FUEL or GAS Roadsters. Firewalls may be altered, moved or replaced entirely.

5.B.1 Modified Roadster - /BFMR, /FMR, /BGMR, /GMR

In addition to the general category requirements, cars in this class shall have an American production automobile roadster body or an exact replica of an American production automobile roadster body as produced between 1923 and 1938. The combined body area covered or altered by the headrest fairing, all parachute fairings, and any other allowed body protuberances or displacements, from the original cockpit opening to the rear of the car cannot exceed 65%, as measured in a horizontal plane from the top view.

Any type of frame may be used, and the engine may be set back 50% of the wheelbase. The driver's seat may be at any location between the firewall and the rear axle centerline. Streamlining ahead of and including the cowl and channeling (4.I.1) is permitted. Air intakes (4.B), air vents (4.C) and the following as defined in Section 4.CC are allowed: Splitters (4.CC.1), Axle Fairing (4.CC.2), Belly Pan (4.CC.3), Headrest Fairing (4.CC.4), Skirts (4.CC.7), Strakes (4.CC9), and Wings (4.CC.12). No fairing or special covering of the wheels and tires is permitted.

A rigid tonneau cover and headrest fairing are allowed as long as they do not violate the definition of an open car.

The body may be cut out to move the driver as far back as possible, as long as the driver remains seated forward of the rear axle centerline and behind the engine. Wheel wells may be filled at stock location, but the rear axle shall not be narrowed to the point that the inner vertical plane of the rear tires is narrower than the original inner fender well. No alterations to the turtle deck are allowed. The body at the original windshield

line may be re-contoured to a flatter configuration, so long as the body top contour is not lower than the top of the doors as measured at the front edge of the doors.
Headrest and parachute pack fairing are allowed as long as the fairing is no larger than the headrest or parachute pack and does not extend past the rear of the body shell. Push bars shall not be solid or offer any aerodynamic advantage.
Maximum wheelbase is 482.6 cm (190 in.) Allowable minimum tread widths are 127 cm (50 in.) rear and 96.52 cm (38 in.) front. Allowable body width across the bottom of the doors shall meet the dimension as originally produced by the manufacturer. The entrant shall provide this dimension.
Wings are allowed. The wing width, including side plates, shall not be wider than the inner vertical plane of the rear tires. The maximum allowable height of the wing shall not exceed 165.1 cm (65 in.) from the ground as measured to the highest part of the wing. The rear of the wing, including side plates, may not be set back more than 45.72 cm (18 in.) behind the rear of the body. The total wing area (measured by the fore to aft dimension times the side to side dimension, on the top surface) shall not exceed 7432.24 sq. cm. (1152 sq. in.) The lowest portion of the wing shall be at least 30.48 cm (12 in.) above the roll cage structure. Multiple element wings are NOT allowed. Spoilers and four-wheel drive systems are NOT allowed.
Minimum Wheelbase Requirements:

Classes AA, A	279.4 cm	110 inches
Classes B, C, D	266.7 cm	105 inches

Classes E, XXF, XXO	254 cm	100 inches
Classes F, XF, XO, V4, V4F	241.3 cm	95 inches
Classes G, H	228.6 cm	90 inches

Engine classes allowed are: AA, A, B, C, D, E, F, G, H, XF, XO, XXF, XXO, V4 and V4F

5.B.1.a Rear Engine Modified Roadster - /BFRMR, /FRMR, /BGRMR, /GRMR

In addition to the general category requirements, cars in this class shall have a production or an exact replica of a roadster body as produced between 1923 and 1938. The combined body area covered or altered by the headrest fairing, all parachute fairings, and any other allowed body protuberances or displacements, from the original cockpit opening to the rear of the car cannot exceed 65%, as measured in a horizontal plane from the top view.

Any type of frame may be used. The driver's seat shall be entirely in front of the engine. The entire engine shall be forward of the centerline of the rear axle. The driver's line of sight shall be over the body work.

Streamlining ahead of and including the cowl and channeling (4.I.1) is permitted. Air intakes, air vents and the following, as defined, in Section 4.CC Streamlining, are allowed: Splitters**, (4.CC1)** Axle Fairing, **(4.CC.4),** Belly Pan, **(4.CC.3),** Headrest Fairing, **(4.CC.4),** Skirts, **(4.CC.7),** Strakes, **(4.CC.9)** and Wings, **(4.CC.12).** No fairing or special covering of the wheels and tires is permitted.

A rigid tonneau cover and headrest fairing are allowed as long as they do not violate the definition of an open car.
Wheel wells may be filled at the stock location, but the rear axle shall not be narrowed to the point that the inner vertical plane of the rear tires is narrower than the original inner fender well. No alterations to the turtle deck are allowed. The body at the original windshield line may be re-contoured to a flatter configuration, as long as the body top contour is not lower than the top of the doors as measured at the front edge of the doors.
Headrest **(4. CC.4)** and parachute pack **(4. CC.5, 4. CC.6)** fairing are allowed as long as the fairing is no larger than the headrest or parachute pack and does not extend past the rear of the body shell. Push bars shall not be solid or offer any aerodynamic advantage.
Minimum wheelbase is 355.6 cm (140 in.) and maximum wheelbase is 482.6 cm (190 in.). Allowable minimum tread widths are 127 cm (50 in.) rear and 96.52 cm (38 in.) front. Allowable body width across the bottom of the doors shall meet the dimension as originally produced by the manufacturer. The entrant shall provide this dimension.
Wings are allowed. The wing width, including side plates, shall not be wider than the inner vertical plane of the rear tires. The maximum allowable height of the wing shall not exceed 165.1 cm (65 in.) from the ground as measured to the highest part of the wing. The rear of the wing, including side plates, may not be set back more than 45.72 cm (18 in.) behind the rear of the body. The total wing area (measured by the fore to aft

dimension times the side to side dimension, on the top surface) shall not exceed 7432.24 sq. cm. (1152 sq. in.). The lowest portion of the wing shall be at least 15.24 cm (6 in.) above the highest point of the body. Multiple element wings are NOT allowed. Spoilers and four-wheel drive systems are NOT allowed.

Engine classes allowed are: AA, A, B, C, D, E, F, G, H, XF, XO, XXF, XXO, V4 and V4F

5.B.2 Fuel-Gas Roadster - /BFR, /FR, /BGR, /GR

In addition to the general category requirements, cars in this class shall have an American production automobile roadster body or an exact replica of an American production roadster body as produced between 1928 and 1938. Any type frame may be used, and the body may be channeled to the bottom of the lower frame rail. Engines may be set back 25% of the wheelbase. Driver location is optional as long as the driver's entire body is between the firewall and the rear axle centerline. Grille shells shall have a minimum of 3419.34 sq. cm. (530 sq. in.) of frontal area ('28 Ford) and shall be mounted in the same vertical position as the original shell. The grille shell shall be measured at the widest point at the original shell and hood parting line. The height of the grille shell may be no higher than the cowl of the body as constructed. The grille shell width may not be altered but may be sectioned or bobbed. Grille shells of a design manufactured after 1932 may not be used on 1932 or earlier bodies. Tanks of any kind in front of the grille shell are specifically prohibited.

The body at the original windshield line may be re-contoured to a flatter configuration, so long as the body contour is not lower

than the top of the doors and the distance between the bottom of the frame and body contour, measured at the original windshield line, is not less than 71.76 cm (28-1/4 in.). Flat panels may cover grille openings. Door hinges, windshield posts, filler caps, and brackets may be removed.
The configuration of the bodywork between the original windshield line and the grille shell is optional, as long as the overall length of the car, from the front of the grille shell to the rear of the body, with any grille shell, is no greater than 363.22 cm (143 in.) for all roadsters except 1933/34 roadsters, which are allowed 386.08 cm (152 in.). All other roadsters whose stock production length is longer than 363.22 cm (143 in.) shall be allowed their stock production length. The entrant shall provide this dimension.
Step pans **(4. EE)** are allowed, but belly pans **(4. CC.3)** or any other horizontal paneling not fitting the definition of floorboard is specifically forbidden. A flat panel may be located behind the grille shell and ahead of the vertical projection of the leading edge of the engine block. This panel shall not be lower than the frame at any point plus the thickness of the material used.
The following, defined as streamlining in Section 4, are allowed: Air Ducts (4. A), Air Intakes (4. B), Air Vents (4. C), Hood Scoops (4.R) and Headrest Fairing (4. CC.4). All other streamlining, as defined in Section 4. CC is NOT allowed.
A rigid tonneau cover and headrest fairing are allowed, as long as they do not violate the definition of an open car. The body may be cut to move the driver rearward, as long as the driver remains seated entirely forward of the rear axle centerline and behind the engine. The rear axle centerline may not be moved

more than four inches aft from the stock position and rear tires may not extend more than 25.4 mm (1 in.) beyond the rear most part of the body proper.

Minimum Wheelbase Requirements:

Classes AA, A, B, C, D, E, XXF, XXO	254 cm	100 inches
Classes F, XF, XO, V4, V4F	241.3 cm	95 inches
Classes G, H	228.6 cm	90 inches

Engine classes allowed are: AA, A, B, C, D, E, F, G, H, XF, XO, XXF, XXO, V4 and V4F

5.B.2.a AMERICAN IRON ROADSTER – C/AIR (Gas only)

This is a single displacement engine class only. All rules which pertain to the existing Fuel/Gas Roadster class, 5.B.2, above, will be enforced in this class.

The engine used must be an American Automotive Production or Light Duty Pick Up Truck engines produced prior to 1973. The maximum engine displacement is 372.99 cid (6.111 L). The engine can be of a larger OEM displacement and reduced to the class maximum by reducing the bore and/or stroke. All engines in this class must run OEM iron blocks and cylinder heads. The block may be decked a maximum of .125”. Sectioning of the block is prohibited. Heads may be milled any amount, flat or angled. No welding or brazing modifications to block or heads allowed unless for repair. The burden of proof as to the origin of the engine components lies with the competitor. Induction

can be either carburetors or mechanical fuel injection. Ignition must be a single magneto or points distributor. No EFI, computer-controlled ignition or data collection computers are allowed **(2.Q)**.

Engine class allowed: C

5.B.3 Street Roadster - /BSTR, /STR (Gas only)

In addition to the general category requirements, cars in this class shall have an American production automobile roadster body, or an exact replica of an American production automobile body produced between 1923 and 1938. The body shall not be altered in height, width or contour, and all stock panels, including cowl (4.MM), cowl eyebrow and windshield post mounting supports, see Section 4.BB, that are an integral part of the body, i.e. welded on or formed into the body sheet metal, shall be retained. Stock panels, correct for the body year used, shall be mounted in their original relationship to each other. On roadsters with non-removable windshield posts, the windshield structure may be cut off 25.4 mm (1 in.) above the lowest outer edge of the windshield frame. Replica panels shall be exact copies of stock panels in size and contour. Hood side panels, if used, are not required to have the stock louvers or doors but shall follow the original contour of the stock side panel. Hood side panels may be trimmed away for clearance of structural chassis or engine components. Bubbles or bulges may cover modifications made to the hood side panel to clear engine components so long as they do not violate the applicable portions of streamlining; Section 4.C.C. Rear fenders are required. The fenders may be bobbed to the bottom of the

body, but may not be relocated, narrowed, or widened. The outer edge of a bobbed fender cannot be cut on a radius greater than the bottom of the original fender.

A radiator **and or** grille shell may be sectioned or bobbed, but the width may not be altered. If switched, the grille shell shall be of the same manufacturer as the body (e.g. Ford to Ford, Chevrolet to Chevrolet, etc.) but not less than 3419.34 sq. cm. (530 sq. in.) of frontal area. The radiator shall fill the shell opening. The grille shell insert shall remain open as in the original configuration and be stock style or removed completely.

Any frame may be used which is fabricated of round, square, or rectangular steel tubing, not less than 5.08 cm (2 in.) x 3.048 mm (.120 in.) or channel not less than 10.16 cm (4 in.) x 3.048 mm (.120 in.) No multi-tube frames may be used. Any type rear end may be used and widening of the rear tread to allow the tires to protrude beyond the fenders is permitted as long as 50% of the tire width is still covered by the fender.

Only cylindrical tanks are allowed in front of the grille. The tank shall be mounted horizontally between and above the frame rails. The maximum allowable dimensions for the tank are: 25.4 cm (10 in.) outside diameter, 81.28 cm (32 in.) circumference, 48.26 cm (19 in.) long, mounted a maximum of 5.08 cm (2 in.) from the leading edge of the grille.

Hood length, as determined by the year of the BODY, may be increased a maximum of 7.62 cm (3 in.) as measured along the top centerline of the hood. The entrant shall provide this dimension. Front cross members may be moved to correspond to the increase in hood length. A maximum of 15% engine set

back is permitted to permit adequate clearance for water pump, blower drives, etc.
The driver shall sit in the stock location and shall not be restricted from entrance to or exit from the car by the cockpit covering. The body may be channeled to the bottom of the frame. Flooring in the car shall be stock, or above the top lip of the top frame rail and comply with the definition of Floorboards contained in Section 4.P.
A rigid tonneau cover is allowed, as long as it does not violate the definition of an open car, Section 4.V.
The following as defined in Section 4 are not allowed; Sectioning of the body, Section 4.Y, Step Pan, Section 4.EE, and Streamlining, Section 4.CC and sub-sections. Louvers in the rear deck lid are allowed as long as they are sealed on the inside. Hood scoop, Section 4.R is allowed. Headers may be used, but shall terminate in a common collector, a minimum of 6” long beyond the end of the header tube.
The following items are required: **a radiator,** a horn, at least one tail/stop light, a transmission and two headlights facing forward in stock orientation. Headlight lenses shall be at least 12.7 cm (5 in.) in diameter. Both lights shall be mounted outside the vertical edges of the grille shell and between 45.72 cm (18 in.) and 60.96 cm (24 in.) from the ground, measured to the centerline of the headlight.
The following items are optional: bumpers, current registration, floor mats, full upholstery, generator, hood side panels, parking brake, license plate, front fenders, running boards or windshield.

Engine classes allowed are: AA, A, B, C, D, E, F, G, H, XF, XO, XXF, XXO, V4 and V4F

5.B.4 VINTAGE COUPE Classes:

Blown Vintage Fuel Competition Coupe:
XF/BVFCC, XO/BVFCC, XXF/BVFCC, XXO/BVFCC, V4/BVFCC and V4F/BVFCC

Vintage Fuel Competition Coupe:
XF/VFCC, XO/VFCC, XXF/VFCC, XXO/VFCC, V4/VFCC and V4F/VFCC

Blown Vintage Gas Competition Coupe:
XF/BVGCC, XO/BVGCC, XXF/BVGCC, XXO/BVGCC, V4/BVGCC and V4F/BVGCC

Vintage Gas Competition Coupe:
XF/VGCC, XO/VGCC, XXF/VGCC, XXO/VGCC, V4/VGCC and V4F/VGCC

Blown Vintage Fuel Altered Coupe:
XF/BVFALT, XO/BVFALT, XXF/BVFALT, XXO/BVFALT, V4/BVFALT and V4F/BVFALT

Vintage Fuel Altered Coupe:
XF/VFALT, XO/VFALT, XXF/VFALT, XXO/VFALT, V4/VFALT and V4F/VFALT

Blown Vintage Gas Altered Coupe:
XF/BVGALT, XO/BVGALT, XXF/BVGALT, XXO/BVGALT, V4/BVGALT and V4F/BVGALT

Vintage Gas Altered Coupe:
XF/VGALT, XO/VGALT, XXF/VGALT, XXO/VGALT, V4/VGALT and V4F/VGALT

Blown Vintage Gas Coupe:

XF/BVGC, XO/BVGC, XXF/BVGC, XXO/BVGC, V4/BVGC and V4F/BVGC

Vintage Gas Coupe:

XF/VGC, XO/VGC, XXF/VGC, XXO/VGC, V4/VGC and V4F/VGC

The rules in these classes are identical to the respective Modified Category classes, except that only 1948 or earlier bodies with XF, XO, XXF, XXO, V4 or V4F engines are allowed. In all classes except VGC, fenders and running boards may be removed if it can be done by unbolting the fenders from the body. Pre-1949 bodies may have a 7.62 cm (3-in.) beauty chop. Pre-1949 cars shall have radiator/grille shells of the same manufacturer as the body, e.g., Ford on Ford, Chevy on Chevy, etc. Air dams are not permitted in the Vintage Gas Coupe and Sedan classes using vintage engines. Minor trim items, door handles, exposed hinges and rain gutters may be removed in the Competition Coupe and Altered classes only. Minor trim items may be removed in the Gas Coupe classes.

One of the following modifications shall be done to be considered in the Vintage Competition Coupe class:

1. The top shall be chopped more than 7.62 cm (3-in.) lower than the OEM height. The owner shall provide documentation of the OEM top height measured at the center of the cowl.
2. The vehicle shall have a full belly pan.
3. The body from the cowl forward shall be lengthened a minimum of 30.48 cm (12 in.)

4. The engine shall be set back a minimum of 25% of the wheelbase. The engine setback cannot exceed 50% of the wheelbase.

All closed vehicles that would qualify as a V4 or V4F Production Coupe or Sedan will compete in the V4/V4F Gas Coupe class. All open vehicles that would qualify as V4 or V4F production roadster will compete in the V4/V4F Street Roadster class.
All vehicles will run only in the lowest primary class/category for which they are legal, see Section 1.B.

5.B.5 Vintage Oval Track /VOT, Midget Vintage Oval Track /MVOT

The Vintage Oval Track class is for vintage engine, old-style open wheel, rear drive, dirt track and Indy, one or two seat cars, with a tapered tail and cowl. The appearance and design of cars in this category shall be practical for, and as were used in OVAL TRACK and SPEEDWAY competition from the late 1920s to 1957. A limb restraint system (3.D.3 and 4.U) extending from the firewall to behind the driver's seat requiring the driver's feet to be retained and protected, will be strictly enforced. A belly pan alone is not acceptable.
The vintage engines permitted in this class have to be built with pre-1948 design engine blocks; i.e., no modern overhead V8s or blowers are allowed.
Transmission shall not exceed 4 speeds for manual / stick shift transmissions and 3 speeds for automatic transmissions (no overdrive). The use of electronic, or other pedal shifters and additional overdrives are NOT permitted. Manual valve

shifting on automatic transmissions is allowed along as it is accomplished with a mechanical shifter.

The cars and engines in this category should also resemble historic, documented cars and be in a period correct relation to each other; i.e., a GMC engine laid flat in a Kuzma Roadster is not allowed.

No Production body panels are permitted, except for the grill shell. No track roadster configurations are allowed. A fully functioning radiator shall be mounted in front of the engine, and the fuel tank shall be mounted in the tail behind the driver. The driver shall sit entirely behind the engine, ahead of the rear axle, and shall not recline more than 5 deg. from the vertical. The frame may be of any construction except monocoque, and all wheels shall be sprung (2.D). Shocks must be mounted outside the frame. "Knock-Off" type wheels specifically made for racing may be used in this class. Knock-Offs must be safety wired.

At least 2 Brakes on either the front or rear axle are required. No front wheel only braking systems are allowed. Brakes must be mounted outside the body.

Ground effects, wings or wheel fairings are NOT permitted. Spun aluminum wheel discs are allowed. The usual track- style nerf bars are optional if they give no aerodynamic aid.

If required, parachute packs must be mounted behind the roll cage (on top of the tail) or in the push bar area. No fairing, molding or wings permitted.

Tarps and Panels may be fitted around the cockpit, but there may be no covering above the driver's head, except for the roll

cage, nor any panel that shall be moved or swung to safely enter or exit the cockpit.
Grille/Nose opening must resemble the documented race car and can NOT be filled. Air inlet opening in grille/nose must be a minimum of 193.548 sq. cm. (30 sq. in.) for VOT and 161.29 sq. cm. (25 sq. in.) for MVOT, not including the grille and/or grille bars.
Excessive engine set back is prohibited. The most rear edge of the engine block may not extend inside the cowl section
Direct mounted dog clutches or Offy (NOT Ford A) drum-type flywheel- clutch assemblies need not be covered by a scatter shield, see Section 3.O.
All other safety rules are applicable. Particular attention will be paid to arm restraints, adequate caster, and proper steering ratios.
All cars shall be equipped with a full roll cage, see Section 3.B.
Fuel is restricted to gasoline or alcohol. Nitro methane or nitrous oxide is not allowed. In this class ONLY, non-production overhead cam engines of pre-'48 design (Miller, Offy, HAL, etc.) run in XXO Class.
ALL NEW CARS or EXISTING CARS where body modifications are being made shall be submitted to the VOT Category Chair for approval.
Engine classes allowed are XO, XF, XXF, XXO, V4 and V4F
Maximum cid Midget Vintage Oval Track/MVOT

Flathead	150 cid
Overhead	125 cid

5.C CLASSIC CATEGORY

This category encompasses American and Foreign coupes and sedans produced between 1928 and 1981 with a production rate of at least 500 vehicles of the same model for sale to the general public. Entries shall be unaltered in height, width, and contour with all stock panels, i.e., hoods, fenders, doors, etc., mounted in their original relationship to each other.

A generic requirement for this category is the car shall have been originally produced with factory-installed seating for 4 or more people, i.e., adults or children. If the car was produced and sold with 2 seats on some models and 4 seats (including jump seats) on other models, the car will be classified as a Coupe and Sedan. For reasons of economy and historical authenticity, certain electronic engine technologies are not allowed. All entrants running in Classic classes must have pictures of the car as produced with their Logbook for certification purposes.

Classes within the Classic Category are the equivalent of the Modified and Production categories with body modifications as allowed in those categories. American coupes and sedans in the year range of 1928-1948 using non-vintage engines may compete with the fenders and running boards removed in the Classic Category, Altered class. Within the Classic Category pre-1949 bodies may have a 7.62 cm (3-in.) beauty chop.

In order to prevent a vehicle from competing in both the Classic and Modified categories, the following policy is established: American coupes and sedans within the year range of 1928-1948 using non-vintage engines such as a Chevy 350, Ford 351, and Chrysler Hemi OHV V-8, etc. may compete within the Classic Category classes. Body modifications shall comply with

the class in which the vehicle is entered. El Caminos and Rancheros meeting the requirements within this category will compete in the appropriate class.
The following items ARE allowed: capacitive discharge type ignition systems with rev limiter, carburetors or mechanical fuel injection, one distributor or one magneto (one ignition system only) and OEM EFI. Sensor controlled ignitions are allowed but shall be stock and not modified in any way for the year and model of the vehicle entered. Direct-reading gauges, either electronic or mechanical, and data recorders are allowed.
The following items are NOT allowed: non-OEM Electronic Fuel Injection, (EFI), sensor-controlled engine management systems with feedback loop, and multiple magnetos or distributors.
THE MINIMUM REQUIREMENT FOR A VEHICLE WITHIN THE YEAR RANGE OF 1928-1981 TO COMPETE IN THE MODIFIED OR PRODUCTION CATEGORIES SHALL BE THE USE OF A NON-O.E.M. EFI SYSTEM.
Once a vehicle in the Classic Category has competed in an SCTA-BNI sanctioned event, the vehicle shall remain in that category for the current racing season.

Body Classes: /CBFALT, /CFALT, /CBGALT, /CGALT, /CBGC, /CGC
Engine Classes: AA, A, B, C, D, E, F**,** G, H, I, J
Body Classes: /CPRO
Engine Classes: AA, A, B, C, D, E, F, G, H, I, J
Body Classes: /CPS
Engine Classes: C, D, E

5.D MODIFIED CATEGORY

This category encompasses American and foreign coupes and sedans and utes unaltered in height, width or contour, and with all stock panels mounted in original relationship to each other. The vehicle has been modified to such an extent that it no longer fits into the Production Category. A generic requirement for this category is the car shall have been originally produced with factory installed seating for 4 or more people, i.e. adults or children. If the car was produced and sold with 2 seats on some models and 4 seats (including jump seats) on other models, the car will be classified as a Coupe and Sedan. Examples include Honda CRX, Ford Mustang GT 350's, Porsche, Nissan Z 2+2, etc. *Vehicles running in UTE class are exempt from any seating requirements.*

All entrants running in Modified classes must have pictures of the car as produced with their Log Book for certification purposes.
Within the Modified category the amount of modification determines the class. For example, a Gas Coupe is basically a Production car with an engine swap, an Altered is a Gas Coupe with headlights and grille covered and the engine set back, a Competition Coupe is an Altered with the nose lengthened and streamlined.
In classes where the removal of rear-view mirrors is allowed the OEM fender or door shape must be retained. If a fender stamping has a mirror housing as part of the fender or door, that shape must be retained.

Front air dams and splitters are permitted in the Modified Category, see Section 4. CC.1. In Gas Coupe and Sedan *and Ute* Classes the original grill opening shall remain uncovered. Vehicles in this category that exceed 200 MPH, or if the existing class record is in excess of 200 MPH, shall have roof rails, Section 4. X.

Vehicles competing in the Competition Coupe and Modified Sports *and Ute* classes shall have documentation showing the stock vehicle BEFORE modification.
El Caminos and Rancheros meeting the requirements within this category will compete in the appropriate class.

5.D.1.a Competition Coupe & Sedan - /BFCC, /FCC, /BGCC, /GCC

This class encompasses production coupe or sedan bodies unaltered in width or contour. Streamlining ahead of and including the cowl, channeling, belly pan and skirts and spoilers, as defined in Section 4.CC. is permitted. One of the following modifications SHALL be done to be considered in this class:

1. Top shall be chopped.
2. The vehicle shall have a full belly pan.
3. The body from the cowl **(4. MM)** forward shall be lengthened a minimum of 30.48 cm (12 in.)
4. The engine shall be set back a minimum of 25% of the wheelbase. The engine setback cannot exceed 50% of the wheelbase **(4. AA).**

Other than top chopping **(4. I),** no modification to the body is allowed. Minimum vertical windshield height is 12.7 cm (5 in.).

The front and rear chop shall be equal. Window openings may be covered by flat plates on the outside of the opening or left open. Driver shall sit COMPLETELY ahead of the rear axle, inside the body and behind the engine, except in rear-engine cars using the original engine LOCATION. Driver exit hatches in the roof are recommended but shall not change the contour of the body. Cars in this class are considered in the Modified category and shall comply with the general rules of the category.
Wing width including side plates shall not be wider than the outside width of the body. The maximum allowable height of the wing including side plates shall not exceed 165.1cm (65 in.) from the ground as measured to the highest part of the wing. The rear of the wing including side plates may not be set back more than 45.72 cm (18 in.) behind the rear of the body. The lowest portion of the wing shall be at least 15.24 cm (6 in.) above the highest point of the body. The total wing area (measured by the fore-to-aft dimension times the side-to-side dimension on the top surface) shall not exceed 7432.24 sq. cm (1152 sq. in.) Multiple element wings are NOT allowed.

NOTE: Entrants electing to use a pre-1949 body in the Competition Coupe classes need not comply with the seating requirement for four (4) average size adults. The rear inner fender panels may be modified to allow the rear tires to be located within the body. This rear fender panel allowance does NOT apply to Vintage Category vehicles using vintage engines. Drip rails may be removed or filled.
Engine classes allowed are: AA, A, B, C, D, E, F, G, H, I, J, XF, XO, XXF and XXO

5.D.1.b Competition Ute - /BFCU, /FCU, /BGCU, /GCU

This class encompasses production utes that are a derivative of an Australian based sedan 1928 to current year, unaltered in width or contour. Streamlining ahead of and including the cowl, channeling, belly pan and skirts and spoilers, as defined in Section 4.CC. is permitted. One of the following modifications SHALL be done to be considered in this class:

1. *Top shall be chopped.*
2. *The vehicle shall have a full belly pan.*
3. *The body from the cowl forward shall be lengthened a minimum of 30.48 cm (12 in.).*
4. *The engine shall be set back a minimum of 25% of the wheelbase. The engine setback cannot exceed 50% of the wheelbase.*

Other than top chopping, no modification to the body is allowed. Minimum vertical windshield height is 12.7 cm (5 in.) The front and rear chop shall be equal. Window openings may be covered by flat plates on the outside of the opening or left open. Driver shall sit COMPLETELY ahead of the rear axle, inside the body and behind the engine, except in rear-engine cars using the original engine LOCATION. Driver exit hatches in the roof are recommended but shall not change the contour of the body. Cars in this class are considered in the Modified category and shall comply with the general rules of the category.
Wing width including side plates shall not be wider than the outside width of the body. The maximum allowable height of the wing including side plates shall not exceed 65 in. from the ground as measured to the highest part of the wing. The rear of

the wing including side plates may not be set back more than 45.72 cm (18 in.) behind the rear of the body. The lowest portion of the wing shall be at least 15.24 cm (6 in.) above the highest point of the body. The total wing area (measured by the fore-to-aft dimension times the side-to-side dimension on the top surface) shall not exceed 7432.24 cm (1152 sq. in.) Multiple element wings are NOT allowed.

5.D.2.a Altered Coupe - /BFALT, /FALT, /BGALT, /GALT

This class encompasses American coupe or sedan bodies 1982 to the current year, and foreign coupe or sedan bodies 1928 to the current year, unaltered in height, width, length or contour. The body shall be mounted to the chassis with all body panels mounted in the original relationship to each other. One of the following modifications shall be done to be considered in this class:

1. The addition of a step pan as defined in Section 4. EE.
2. The engine set back a maximum of 25% of the wheelbase as defined in Section 4. AA.
3. A front-wheel drive vehicle converted to rear wheel drive.
4. Covered headlights and grille as described below.

Any frame may be used as long as the bottom line of the frame is not higher than the outer bottom line of the body between the firewall and the rear wheels. An exception will be made if a stock frame and the same year/make of body are being used. If the ORIGINAL frame/body relationship is such that the lower bottom line of the frame is above the outer bottom line of the body, that frame/body combination may be used. The burden

of proof of the ORIGINAL frame/body relationship lies with the entrant. The frame may not be exposed from the bottom of the body. This rule does NOT apply to Vintage body class vehicles. This class is allowed a 2% maximum body stretch in the cowl area, in front of the firewall. This does not apply to Vintage class. An engine swap as defined in Section 4. N is permitted. No streamlining, as described in Section 4. CC is allowed, unless specified. Wheel wells may not be filled or covered. Bumpers, grilles and front lights may be removed, and the opening created may be filled or covered. The filled or covered area may be flush with the adjacent body; the basic shape and contour of the vehicle cannot be changed. Engine intake air may be ducted from these openings. Aftermarket front ends are allowed as long as the item conforms to the class guidelines. Any horizontal paneling which may be construed as a belly pan is prohibited. No taped or filled body, door or window seams are allowed from the firewall back. Windows shall be mounted in the stock fashion or fastened to the inside of the window openings. A non-stock spoiler is permitted as defined in Section 4. CC.6. Any type of exhaust may be used and can exit anywhere from the body but the top.

Roof-mounted spoilers, other than original for the body used, are prohibited. Pre-1949 bodies may be chopped. The chop shall be equal front to rear and shall retain a vertical windshield height of at least 15.24 cm (6 in.) above the top of the cowl with a maximum horizontal length of 17.78 cm (7 in.) from the base of the windshield at the center of the car. The driver shall sit completely ahead of the rear axle, inside the body, and

behind the engine, except in rear-engine cars using the original engine LOCATION. Drip rails may be removed or filled.
Cars in this class are considered in the Modified Category and should comply with the General Rules of the category. Coupes and sedans produced from 1949 to the current model year, not meeting the criteria of the Classic Category, shall compete in the Modified Category classes. Vehicles in this category that exceed 200 MPH, or if the existing record is over 200 MPH, shall have roof rails.
Engine classes allowed are: AA, A, B, C, D, E, F, G, H, I, J, XF, XO, XXF, and XXO

5.D.2.b Altered Ute - /BFALTU, /FALTU, /BGALTU, /GALTU

This class encompasses utes that are a derivative of an Australian based sedan 1928 to the current year, unaltered in height, width, length or contour. The body shall be mounted to the chassis with all body panels mounted in the original relationship to each other. One of the following modifications shall be done to be considered in this class:

1. *The addition of a step pan as defined in Section 4.EE.*
2. *The engine set back a maximum of 25% of the wheelbase as defined in Section 4.AA.*
3. *Covered headlights and grille as described below.*

Any frame may be used as long as the bottom line of the frame is not higher than the outer bottom line of the body between the firewall and the rear wheels. An exception will be made if a stock frame and the same year/make of body are being used. If the ORIGINAL frame/body relationship is such that the lower bottom line of the frame is above the outer bottom line of the

body, that frame/body combination may be used. The burden of proof of the ORIGINAL frame/body relationship lies with the entrant. The frame may not be exposed from the bottom of the body.

This class is allowed a 2% maximum body stretch in the cowl area, in front of the firewall. This does not apply to Vintage class. An engine swap as defined in Section 4.N is permitted. No streamlining, as described in Section 4.CC is allowed, unless specified. Wheel wells may not be filled or covered. Bumpers, grilles and front lights may be removed, and the opening created may be filled or covered. The filled or covered area may be flush with the adjacent body; the basic shape and contour of the vehicle cannot be changed. Engine intake air may be ducted from these openings. Aftermarket front ends are allowed as long as the item conforms to the class guidelines. Any horizontal paneling which may be construed as a belly pan is prohibited. No taped or filled body, door or window seams are allowed from the firewall back. Windows shall be mounted in the stock fashion or fastened to the inside of the window openings. A non-stock spoiler is permitted as defined in Section 4. CC.6. Any type of exhaust may be used and can exit anywhere from the body but the top.

Roof-mounted spoilers, other than original for the body used, are prohibited. Pre-1949 bodies may be chopped. The chop shall be equal front to rear and shall retain a vertical windshield height of at least 6 in. above the top of the cowl with a maximum horizontal length of 17.78 cm (7 in.) from the base of the windshield at the center of the car. The driver shall sit

completely ahead of the rear axle and behind the engine. Drip rails may be removed or filled.
Utes in this class are considered in the Modified Category and should comply with the General Rules of the category. Vehicles in this category that exceed 200 MPH, or if the existing record is over 200 MPH, shall have roof rails.
Engine classes allowed are: AA, A, B, C, D, E, F, G, H, I, J, XF, XO, XXF, and XXO

5.D.3.a Gas Coupe - /BGC, /GC

This class encompasses American coupe, sedan or convertible bodies 1928 to current year, and foreign coupe, sedan or convertible bodies 1928 to current year, which shall have at least one of the following:

- Engine swap
- Quick-change rear end
- **Conversion from naturally aspirated to blown**

any one of which makes the car ineligible for competition in Production class. A production rate of at least 500 vehicles of the same model for sale to the general public is considered to meet the requirement of a production automobile. Front-wheel drive cars that have been converted to rear-wheel drive are not permitted in this class.
Gas Coupes may not be altered in height, width, length or contour. All body panels shall be mounted in the original relationship to each other. An engine swap as defined in Section 4.N is permitted.
All vehicles shall use a seat designed for racing, see Section 3. D.1. The upholstery and the passenger seat assembly may be

removed. The engine may be set back a maximum of 2% of the wheelbase.

The following items shall be retained in the stock location and of the same year as the body: frame, fenders, hood, grille, drip rails (shall not be filled), windows, door handles, window trim, headlights (high and low beam), tail lights, parking lights, stop lights and bumpers. Decals are not acceptable as meeting the headlight and taillight requirements. A replacement radiator of the same height and width and mounted in the original location as OEM shall be used. Blocking of air flow thru the radiator in front or behind is not allowed. An on-board starter capable of starting the engine shall be used.

Convertibles are restricted to the Gas Coupe & Sedan and Production category classes only. Convertibles shall run with the top and rear windows in the up position.

Within the Gas Coupe & Sedan classes the following body and chassis modifications may be made: wheel openings may be radiused for tire clearance, the generator/alternator, horn and stock gas tank may be removed, headers may be used, no individual stacks allowed, exhaust collectors may exit through the front fenders, minor chrome trim and emblems may be removed. Air intakes, see Section 4.B, may be used.

The following are not permitted: streamlining as described in Section 4.CC unless specified**,** air vents, headlight air intake, channeling, exhaust outlets through the doors or hood, blocked off grilles or radiators, taped or filled body, door, or window seams and one-piece front ends.

NOTE: Any “narrowing” or fairing of bumpers into the body will result in the car being placed in Altered Class. Bumpers shall be

stock and in the stock position. Air dams are allowed but shall not cover the original grille opening. See specifications outlined in Modified Category description.
Coupes and sedans produced from 1949 to the current model year, and not meeting the criteria of the Classic Category, shall compete in the Modified Category classes. Vehicles in this category that exceed 200 MPH, or if the existing class record is in excess of 200 MPH, shall have roof rails, see Section 4.X
Engines classes allowed are: AA, A, B, C, D, E, F, G, H, I, J, XF, XO, XXF, and XXO

5.D.3.b Gas Ute - /BGU, /GU

This class encompasses utes that are a derivative of an Australian based sedan 1928 to the current year, which shall have at least one of the following:

- *Engine swap*
- *Quick-change rear end*
- *Conversion from naturally aspirated to blown*

any one of which makes the car ineligible for competition in Production class. A production rate of at least 500 vehicles of the same model for sale to the general public is considered to meet the requirement of a production automobile.
Gas Utes may not be altered in height, width, length or contour. All body panels shall be mounted in the original relationship to each other. An engine swap as defined in Section 4.N is permitted.
All vehicles shall use a seat designed for racing, see Section 3. D.1. The upholstery and the passenger seat assembly may be removed. The engine may be set back a maximum of 2% of the wheelbase.

The following items shall be retained in the stock location and of the same year as the body: frame, fenders, hood, grille, drip rails (shall not be filled), windows, door handles, window trim, headlights (high and low beam), tail lights, parking lights, stop lights and bumpers. Decals are not acceptable as meeting the headlight and taillight requirements. A replacement radiator of the same height and width and mounted in the original location as OEM may be used. Blocking of air flow thru the radiator in front or behind is not allowed. An on-board starter capable of starting the engine shall be used.

Within the Gas Ute classes, the following body and chassis modifications may be made: wheel openings may be radiused for tire clearance, the generator/alternator, horn and stock gas tank may be removed, headers may be used, no individual stacks allowed, exhaust collectors may exit through the front fenders, minor chrome trim and emblems may be removed. Air intakes, see Section 4. B, may be used.

The following are not permitted: streamlining as described in Section 4. CC unless specified, air vents, headlight air intake, channeling, exhaust outlets through the doors or hood, blocked off grilles or radiators, taped or filled body, door, or window seams and one-piece front ends.

NOTE: Any "narrowing" or fairing of bumpers into the body will result in the car being placed in Altered Class. Bumpers shall be stock and in the stock position. Air dams are allowed but shall not cover the original grille opening. See specifications outlined in Modified Category description.

Vehicles in this category that exceed 200 MPH, or if the existing class record is in excess of 200 MPH, shall have roof rails, see Section 4. X
Engines classes allowed are: AA, A, B, C, D, E, F, G, H, I, J, XF, XO, XXF, and XXO

5.D.4 Modified Sports - /BFMS, /FMS, /BGMS, GMS

This class is intended for production sports cars as accepted for GT class, which have been modified to such an extent as to make the vehicle illegal for the Production Category. This class is limited to production (a minimum of 500 vehicles) of the same model for sale to the general public. Limited production (a minimum of 50 examples produced) sports car bodies, which may be placed on any frame, will be permitted. No “one-of-a-kind” bodies will be allowed. Production sports cars with an engine swap (4. N) will be allowed.
Streamlining ahead of and including the cowl, channeling, belly pan and skirts is allowed. Channeling (4. I.1), Belly Pan (4. CC.3), Skirts (4. CC.7), Spoilers (4. CC.8) and Strakes (4. CC.9) are allowed. Front tread width may be narrowed to a minimum of 68.58 cm (27 in.). Removal of minor trim and bumpers is allowed as long as the body is not altered in length, width or contour. Windshields may be lowered or removed.
Coupe tops may be chopped. The top chop must maintain a minimum vertical windshield height of 5 inches. The lower location of the A, B and/or C pillars must be in original OEM location and the A pillar must be OEM width. A top chop by definition alters the contour of the vehicles. Drip rails may be removed or filled.

No wings are allowed unless the wing was offered as an OEM item for the year/model of vehicle used. The wing shall have been available on the vehicle as purchased new and the wing shall remain unmodified and mounted in the stock location as purchased from the dealer. The entrant is required to provide suitable documentation.
Front fenders may be removed at the stock fender location or at a point no further forward than 15.24 cm (6 in.) from the base of the windshield, measured at the centerline of the vehicle.
Any frame may be used; see Section 2.C. Maximum wheelbase allowed shall be 330 cm (130 in.). Any type of rear end may be used.
Engine placement is optional, so long as no change is made to the driver's location as originally designed. The driver shall be seated behind the engine, except in the case of production and limited production bodies which are designed for mid/rear-engine locations. The driver shall not be restricted from entry or exit of the vehicle by the cockpit covering.
The following items are required: a starter capable of starting the engine, tail/stop lights, a transmission (either manual or automatic), and a radiator when originally equipped.
The following items are not permitted: Air Vents (Section 4.C), Headrest Fairing (Section 4. CC.4) which extends past the rear of the body and taping of body and window seams.
Engine classes allowed are: AA, A, B, C, D, E, F, G, H, I

5.D.4a Modified Grand Touring Sport (Gas Only)

This class is intended for series production sports cars which have been modified to such an

extent to make them illegal for the production (GT) class and limited production sports car type
bodies such as Kellison, Devin, Victress, Bradley and Sterling which may be placed on a
production or specially constructed frame. This class is limited to production and limited
production (a minimum of 50 produced) of the same model for sale to the general public. No
“One of a Kind” type bodies will be permitted.
One of the following modifications shall be done to be considered in this class:
1. The addition of a belly pan
2. A quick change rear end
3. An engine swap
4. A front-wheel drive vehicle converted to rear-wheel drive or a rear wheel drive vehicle
converted to a front wheel drive
Production sports cars with an engine swap (4.N) will be legal for the class. Blowers may be
used.
A GT Sports body may not be altered in height, width, length or contour. The wheelbase shall
not be altered. All body panels shall be mounted in the original relationship to each other.
Factory soft top or open convertible windshields may be lowered or removed. Tonneau covers
(2.O) are allowed.
Any frame may be used as long as the bottom line of the frame is not higher than the outer

bottom line of the body between the firewall and the rear wheels. An exception will be made if a
stock frame and the same year/make of body are being used. If the ORIGINAL frame/body
relationship is such that the lower bottom line of the frame is above the outer bottom line of the
body, that frame/body combination may be used. The burden of proof of the ORIGINAL
frame/body relationship lies with the entrant. The frame may not be exposed from the bottom of
the body.
Any type rear-end differential may be used.
No change can be made to the driver's location as originally designed and the driver is seated
behind the engine except in the case of production sports car type bodies which were designed
and intended for rear engine usage. The driver must not be restricted from entrance or exit from
the vehicle by moving the cockpit covering.
Bumpers, grilles and front lights may be removed, and the opening created may be filled or
covered. The filled or covered area may be flush with the adjacent body; the basic shape and
contour of the vehicle cannot be changed. Aftermarket front ends are allowed as long as they
conform to the class guidelines.
Blocking the airflow thru the radiator in front or behind is not allowed.

No streamlining, as described in Section 4.CC, is allowed, unless specified. Wheel wells may not
be filled or covered. Wheel well openings may be radiused for tire clearance. No taped or filled
body, door or window seams are allowed from the firewall back. Windows shall be mounted in
the stock fashion or fastened to the inside of the window openings. Minor chrome trim and
emblems may be removed.
The following items are permitted: Air dams and Splitters (4.CC.1). Skirts (4.CC.7) A non-stock
Spoiler (4.CC.8).
Any type of exhaust may be used, except no individual stacks are allowed, and can exit
anywhere from the body but the roof, top of front fenders or hood.
Roof-mounted spoilers, other than original for the body used, are prohibited.
The driver shall sit completely ahead of the rear axle, inside the body, and behind the engine,
except in rear-engine cars using the original engine LOCATION.
Drip rails may be removed or
filled.
The following items are required: a starter capable of actually starting the engine, tail/stop lights **of the same year and manufacturer of the body**, a full transmission, either manual or automatic utilizing the full shift pattern and gears, a radiator of the same dimensions or larger as originally equipped **and mounted in the same location**.

The following items are not permitted: air vents, headlight air scoops, blocked off radiator,
taping of body or window seams, non-stock head rest fairings, trip fences, or vortex generators.
Cars in this class are considered in the Modified Category and should comply with the General
Rules of the category.
Engine classes allowed are: AA, A, B, C, D, E, F, G, H, I, J

5.D.5 Modified Pickup Truck - /BMP, /MP

This class is for 1946 and later American made pickup trucks with full stock bed, unaltered in height, width or contour, with all panels mounted in the original relationship to each other. Samples of allowed trucks include but are not limited to: Chevrolet C series, Ford F series and others. Pickup trucks in this class are considered in the Modified Category, Gas Coupe class and shall therefore comply with all rules of this category and class. Frame “clips” are allowed in front of and to the rear of the cab. The original frame shall be in place under the cab. Frame cross members may be moved, modified, replaced or removed.
Minimum requirements to compete in the Modified Pickup class are at least one of the following:

- Engine swap
- Quick-change rear end
- Conversion from naturally aspirated to blown

Production pickups with a supercharger and/or full-time four-wheel drive shall compete in this category and class. No

streamlining as described in Section 4.CC is allowed unless specified.
Covering of pickup beds with tarps or panels is allowed. The cover shall be no higher than the edge of the pickup bed. Aftermarket bed caps are allowed but shall not allow any aerodynamic advantage. Pickups may run with the tailgate raised, lowered or removed. All parachute packs shall be mounted below the bed rail level. The exhaust shall not exit through the pickup bed floor.
Pickups with cab-mounted gas tanks shall have the gas tank removed. The tank shall be relocated so as to offer no aerodynamic advantage.
Engine classes allowed are: AA, A, B, C, D, E, XF, XO, XXF and XXO

5.D.6 Modified Mid/Mini Pickup Truck - /BMMP, /MMP

This class is for 1972 and later American and foreign made mid and mini sized pickup trucks with full stock bed, unaltered in height, width or contour with all panels mounted in the original relationship to each other. Samples of allowed trucks include but are not limited to: Chevrolet S-10, Ford Ranger, Nissan and Toyota.
Pickup trucks in this class are considered to be in the Modified Category, Gas Coupe class and therefore shall comply with all rules of this category and class. Frame “clips” are allowed in front of and to the rear of the cab. The original frame shall be in place under the cab. Frame cross members may be moved, modified, replaced or removed.
Minimum requirements to compete in the Modified Mid/Mini Pickup class are at least one of the following:

- Engine swap
- Quick-change rear end
- Conversion from naturally aspirated to blown

Production pickups with a supercharger and/or full-time four-wheel drive shall compete in this category and class. No streamlining as described in Section 4.CC is allowed unless specified.
Covering of pickup beds with tarps or panels is allowed. The cover shall be no higher than the edge of the pickup bed. Aftermarket bed caps are allowed but shall not allow any aerodynamic advantage. Pickups may run with the tailgate raised, lowered or removed. All parachute packs shall be mounted below the bed rail level. The exhaust shall not exit through the pickup bed floor.

Engine classes allowed are; C, D, E, F, G, H and I

5.D.7 TRACK and CIRCUIT CARS

This class is for existing competition cars previously used in other formulas or circuit racing in Australia. It provides for the cars to be used for land speed racing with a minimal amount of safety modifications so as not to destroy the authenticity or heritage of the car. The compromise is that these cars must run the same engines and running gear that was used in the day.

5.D.7a TRACK NASCAR - /TNGEN1, /TNGEN2, /TNGEN3, /TNGEN4, /TNGEN5

This class is for NASCAR bodied vehicles.

To qualify in the NASCAR class (/TNGEN1, /TNGEN2, /TNGEN3, /TNGEN4, /TNGEN5) the vehicle must be based on an existing NASCAR body and chassis built before 2013 and resemble one of the manufacturers vehicles that competed in NASCAR either in the USA or Australia.
The classes are based on the long history of NASCAR and the generational change that has taken place.
TNGEN1 - based on vehicles manufactured from 1948 - 1966
TNGEN2 - based on vehicles manufactured from 1967 - 1980
TNGEN3 - based on vehicles manufactured from 1981 - 1991
TNGEN4 - based on vehicles manufactured from 1992 - 2006
TNGEN5 - based on vehicles manufactured from 2007 – 2012

Typically, the car has a stock body with a modified frame and modified chassis. The driver shall sit COMPLETELY ahead of the rear axle, inside the body and behind the engine. Driver exit hatches in the roof are recommended but shall not change the contour of the body.
Cars in this class are considered in the Modified category and shall comply with the general rules of the category and the technical specifications found in Section 3.
The roll cage as fitted for this category of vehicle usually exceeds the DLRA specifications, however additional bars and or gussets may be required by the DLRA technical Committee. This can only be determined after an initial inspection prior to presenting at the lake.
Vehicles in this category that exceed 200 MPH, or if the existing class record is in excess of 200 MPH, shall have roof rails, Section 4. X.

In the interests of safety over authenticity, vehicles in this category that exceed 175 MPH may have spoilers fitted as described in Section 4.CC.8.
Vehicles in this category that exceed 175 MPH must have one of more parachutes fitted as per Section 4.CC.5. Two parachutes are mandatory for vehicles exceeding 250 MPH.
All cars must use up to a 6.1-litre, naturally aspirated V8 engine. Externally, the engine must appear almost stock.

The entrant shall provide the documentation that the vehicle did run in a NASCAR or AUSCAR Series.
Engine classes allowed are: ***C***

5.D.7b TRACK AUSCAR - /TAUS

To qualify for the AUSCAR class the vehicle must be based on the Commodores and Falcons that ran in AUSCAR in Australia. Eligible models include the VB, VC, VH, VK, VL, VN, VP, VR and VS Commodores, and XD, XE, XF, EA, EB, ED, EF and EL Falcons. To be eligible a logbook must be supplied as proof that the vehicle competed in a AUSCAR event.
Vehicles must display all AUSCAR modifications. Front and rear spoilers may be used as found in the day, factory windscreen glass required with AUSCAR safety bars, rear, and side windows to be polycarbonate, front door glass is removed completely. Headlight, tail-light and blinker openings are covered with steel, factory grilles are used, custom miniature side mirrors are normally fixed to the rear of the driver's A-pillar, and doors are welded shut (requiring ingress and egress through the window opening). All other panels are standard.

Typically, the car has a stock body with a modified frame and modified chassis. The driver shall sit COMPLETELY ahead of the rear axle, inside the body and behind the engine. Driver exit hatches in the roof are recommended but shall not change the contour of the body.
Cars in this class are considered in the Modified category and shall comply with the general rules of the category and the technical specifications found in Section 3.
The roll cage as fitted for this category of vehicle usually exceeds the DLRA specifications, however additional bars and or gussets may be required by the DLRA technical Committee. This can only be determined after an initial inspection prior to presenting at the lake.
Vehicles in this category that exceed 200 MPH, or if the existing class record is in excess of 200 MPH, shall have roof rails, Section 4. X.
In the interests of safety over authenticity, vehicles in this category that exceed 175 MPH may have spoilers fitted as described in Section 4.CC.8.
Vehicles in this category that exceed 175 MPH must have one of more parachutes fitted as per Section 4.CC.5. Two parachutes are mandatory for vehicles exceeding 250 MPH.

All cars must use a naturally aspirated V8 engine, as fitted in the day.
Externally, the engine must appear almost stock.
The entrant shall provide the documentation that the vehicle did run in a NASCAR or AUSCAR Series.

*Engine classes allowed are: **D***

5.D.7cTRACK SUPERCAR - /TS3A, /TSV8

This class is for Australian Supercars, usually based on 4 door cars from 1991 – 1996 (FTS3A) and 1997 to current (FTSV8) which are not altered in width or contour and retain their custom chassis and control body panels. They must be a body and configuration must be of a vehicle that raced in the Supercar Series.

All doors must be able to be opened. No additional modification to the body is allowed. Aerodynamics are restricted to what was available in the day. Window openings may be covered by flat plates on the outside of the opening or left open. Driver shall sit COMPLETELY ahead of the rear axle, inside the body and behind the engine. Decals are not acceptable as meeting the headlight and taillight requirements.

Cars in this class are considered in the Modified category and shall comply with the general rules of the category and the technical specifications found in Section 3.

The roll cage as fitted for this category of vehicle does not comply with the DLRA specifications, additional bars and or gussets will be required by the DLRA technical Committee. This can only be determined after an initial inspection prior to presenting at the lake.

Vehicles in this category that exceed 200 MPH, or if the existing class record is in excess of 200 MPH, shall have roof rails, Section 4. X.

In the interests of safety over authenticity, vehicles in this category that exceed 175 MPH may have spoilers fitted as described in Section 4.CC.8.

Vehicles in this category that exceed 175 MPH must have one of more parachutes fitted as per Section 4.CC.5. Two parachutes are mandatory for vehicles exceeding 250 MPH.
All cars must use up to a 5.0-litre, naturally aspirated V8 engine. The entrant shall provide the documentation that the vehicle did run in a Supercar Series.
Engine classes allowed are: ***D***

5.E PRODUCTION CATEGORY

This category is intended to represent typical transportation vehicles, which may be purchased from ANY automobile dealer. A generic requirement for this category is the car shall have been originally produced with factory installed seating for 4 or more people, i.e. adults or children. If the car was produced and sold with 2 seats on some models and 4 seats (including jump seats) on other models, the car will be classified as a Coupe and Sedan. Examples include Honda CRX, Ford Mustang GT 350's, Porsche, Nissan Z 2+2, etc.

Utes are exempt from seating requirements.

A production rate of at least 500 vehicles of the same model and available from any dealer's inventory for sale to the general public is considered to meet the requirement of a production automobile. In keeping with this intent, the cars are aerodynamically "stone stock" with no body parts allowed which were not parts of the manufacturer's production for the series of the vehicle involved. *No Touring or race car panels are allowed*. All entrants running in Production classes must have pictures of the car as produced with their Logbook for certification purposes.

The engine used shall have been available in the model of vehicle used as purchased from ANY automobile dealer. Modified body, body panels, spoilers, air dams, etc. intended for and as accepted or sanctioned by NASCAR, NHRA, SCCA**,** *V8 Super car* etc. are not permitted for use in this category unless specifically allowed. A manufacturer's part number does not necessarily imply that a part is an original, factory-installed body part. Both exterior and interior body panels are

considered to be part of a production vehicle and shall be mounted in their original relationship to each other.
Racing seats shall be used per Section 3. D.1. The original side panel upholstery, both front and rear, must remain or be replaced with an aluminum equivalent**.** A stock or full width dashboard is mandatory. A fabricated, non-flammable equivalent is acceptable. Carpet, sound deadening material, headliner, minor chrome trim and emblems may be removed.
A different displacement size of the same design engine may be used provided it does not constitute an engine swap as defined in Section 4.N. Any transmission, non-quick-change rear end, and an on-board starter capable of starting the engine shall be used so long as the original running gear design is retained.
Vehicles originally produced as a front-wheel drive chassis and converted to rear-wheel or four-wheel drive chassis are NOT eligible for competition in the Production Category. Choices of camshafts, induction and ignition are unlimited.
Cylinder heads are limited to original number of valves and port configuration.
Vehicles in this category that exceed 200 MPH, or if the existing record is over 200 MPH, shall have roof rails, see Section 4.X
PRODUCTION RECORDS ARE SUBJECT TO APPROVAL AND WILL BE CERTIFIED ONLY AFTER COMPARISON WITH THE MANUFACTURER'S SPECIFICATIONS FOR THE MODEL ENTERED. THE ENTRANT IS REQUIRED TO PROVIDE SUITABLE DOCUMENTATION. El Caminos and Rancheros meeting the requirements within this category will compete in the appropriate class.

XX/PRO class is limited to cylinder head port configuration as originally designed. This applies to the XXF and XXO engine classes.
All closed vehicles that would qualify as a V4 or V4F Production coupe or sedan will compete in the V4 or V4F Gas Coupe class.
Vehicles using a hybrid power source, such as a gasoline/battery pack, will compete in the equivalent cubic inch class of the gasoline engine. The battery pack SHALL be the stock unit as sold with the vehicle model used. The battery pack will be sealed to the race vehicle to ensure that it cannot be swapped. No offboard charging of the battery packs will be allowed. If the vehicle is removed from the race meet, all previous runs will be forfeited. OEM throttle body control SHALL be used. The entrant shall provide the documentation to ensure that production units are used.

5.E.1.a Production Coupe and Sedan - /PRO

This class is for American coupes and sedans 1928 to current year, foreign coupes and sedans 1949 to current year, or 1928-1981 American coupes and sedans that do not meet the requirements for Classic Category.
The vehicle shall be unaltered in height, width or contour, with all stock panels mounted in the original relationship to each other. This category does not include cars properly classified as Sports or GT. A production rate of at least 500 vehicles of the same model for sale to the general public is considered to meet the requirement of a production automobile. The entrant shall provide the documentation to ensure that production requirements are met.

The following items shall be retained in the stock location and of the same year and manufacture as the body: frame, floor pan, fenders, hood, grille, drip rails (shall not be filled), windows, door handles, window trim, dashboard, headlights (high and low beam), taillights, parking lights, stop lights, front and rear bumpers and horn. A replacement radiator of the same height and width and mounted in the original location as OEM shall be used. Blocking of air flow thru the radiator in front or behind is not allowed.

Decals are not acceptable as meeting the headlight and taillight requirements. The stock gas tank shall be fitted but need not be used.

The following body and chassis modifications may be made: headers, hood scoop (Section 4.R), wheel openings may be radiused for tire clearance. Passenger and rear seat may be removed. Air dams and air spoilers identical to factory optional equipment (OEM) for the body in question may be added.

The following are NOT permitted: Streamlining, (4.CC and subsections), Air Ducts (4.A), Air Vents (4.C), Chopping (4.I), and Channeling (4.I.1). Rules for these classes will be strictly enforced to ensure that cars entered are typical of street machines that may be purchased from ANY automobile dealer. Coupes and sedans produced from 1949 to the current model year, and not meeting the criteria of the Classic Category, shall compete in the Modified Category classes.

Engine classes allowed are: AA, A, B, C, D, E, F, G, H, I, J, XF, XO, XXF & XXO

5.E.1.b Production Ute - /PROU

This class encompasses utes that are a derivative of an Australian based sedan 1928 to the current year.

The vehicle shall be unaltered in height, width or contour, with all stock panels mounted in the original relationship to each other. This category does not include cars properly classified as Sports or GT. A production rate of at least 500 vehicles of the same model for sale to the general public is considered to meet the requirement of a production automobile. The entrant shall provide the documentation to ensure that production requirements are met.

The following items shall be retained in the stock location and of the same year and manufacture as the body: frame, floor pan, fenders, hood, grille, drip rails (shall not be filled), windows, door handles, window trim, dashboard, headlights (high and low beam), taillights, parking lights, stop lights, front and rear bumpers and horn. A replacement radiator of the same height and width and mounted in the original location as OEM may be used. Blocking of air flow thru the radiator in front or behind is not allowed.

Decals are not acceptable as meeting the headlight and taillight requirements. The stock gas tank shall be fitted but need not be used.

The following body and chassis modifications may be made: headers, hood scoop (Section 4.R), wheel openings may be radiused for tire clearance. Passenger seat may be removed. Air dams and air spoilers identical to factory optional equipment (OEM) for the body in question may be added.

The following are NOT permitted: Streamlining, (4.CC and subsections), Air Ducts (4.A), Air Vents (4.C), Chopping (4.I), and Channeling (4.I.1). Rules for these classes will be strictly enforced to ensure that cars entered are typical of street machines that may be purchased from ANY automobile dealer. Engine classes allowed are: AA, A, B, C, D, E, F, G, H, I, J, XF, XO, XXF & XXO

5.E.2.a Production-Supercharged - /PS

This class is intended for American and foreign coupes and sedans that meet the requirement of the Production Coupe and Sedan Class that are equipped with factory supercharger systems. The vehicle shall be as originally equipped and configured. If the vehicle was originally equipped with one turbocharger, one turbocharger shall be used. If the vehicle was originally equipped with a belt-driven supercharger, a supercharger of that type must be used. Supercharged sports coupes equipped with rear jump seats, such as Mazda RX7 Turbo and Porsche 930 series, which would be considered a GT class vehicle, shall compete in the Blown GT class.
Engine classes allowed are B, C, D, E, F, G, H, I and J

5.E.2.b Production-Supercharged Ute- /PSU

This class is intended for utes that are a derivative of an Australian based sedan that meet the requirement of the Production Ute Class that are equipped with factory supercharger systems. The vehicle shall be as originally equipped and configured. If the vehicle was originally equipped with one turbocharger, one turbocharger shall be used. If the

vehicle was originally equipped with a belt-driven supercharger, a supercharger of that type must be used.
Engine classes allowed are B, C, D, E, F, G, H, I and J

5.E.3 Grand Touring Sport - /BGT, /GT

This class is limited to 2-seat production sports cars like the Corvette, Honda S-2000 or Fiero as well as limited production cars like the Factory Five Cobra manufactured by a recognized automobile manufacturer intended for comfortable high-speed driving. A production rate of at least 500 vehicles of the same model for sale to the general public is considered to meet the requirements of a production automobile.
Body styles produced with jump seating for more than two people like a Datsun 280Z 2+2, Porsche 911 or Honda CRX even though they may only have two seats will be considered a Coupe and Sedan and must run in that class.
The following items shall be retained in stock location and of the same year as the body: frame, floor pan, fenders, hood, grille, drip rails (shall not be filled), windows, door handles, window trim, headlights (high and low beam), taillights, parking lights, stop lights, radiator, front and rear bumpers and horn. Decals are not acceptable as meeting the headlight and taillight requirements. The stock gas tank shall be fitted but need not be used.
The following body and chassis modifications may be made: wheel openings may be radiused for tire clearance, the generator/alternator may be removed, and an exhaust system capable of being closed off may be used (no individual stacks). Air dams and air spoilers identical to factory optional equipment for the body in question may be added. All vehicles

shall use a seat designed for racing, see Section 3. D.1. The original side panel upholstery or equivalent shall remain. Minor chrome trim and emblems may be removed, and an OEM Air Intake (Section 4.B) may be used. The stock windshield may not be removed or lowered.

Engine swaps in this class;

Per Production Category rules cylinder heads are limited to the original number of valves and port configuration

- Are permitted as long as they are of the same manufacturer (e.g., Ford into Ford, Porsche into Porsche, etc.).

The following are NOT permitted: Streamlining (4.CC and subsections), Air Ducts (4.A), Air Vents (4.C) headlight air intake, Chopping (4.I) and Channeling (4.I.1).

Rules for this class will be strictly enforced to ensure that cars entered therein are typical of street machines which may be purchased from an automobile dealer.

Engine classes allowed are: AA, A, B, C, D, E, F, G, H, I and J

5.E.4 Production Pickup Truck - /PP (Gas Only)

This class is for 1946 and later American made pickup trucks with full stock bed, unaltered in height, width and contour, with all panels mounted in the original relationship to each other. Samples of allowed trucks include but are not limited to; Chevrolet C series, Ford F series and others.

Pickup trucks in this class are considered in the Production Category (5.E), Production Class (5.E.1) and shall therefore comply with all rules of this category and class. Frame “clips” are allowed in front of and to the rear of the cab. The original

frame shall be in place under the cab. Frame cross members may be moved, modified, replaced or removed.
Any supercharger and/or production full-time four-wheel drive trucks shall compete in the Modified Category, Modified Pickup class.
Covering of pickup beds with tarps or panels is allowed. The cover shall be no higher than the edge of the pickup bed.
Aftermarket bed caps are allowed but shall not allow any aerodynamic advantage. Pickups may run with the tailgate raised, lowered or removed. All parachute packs shall be mounted below the bed rail level. The exhaust shall not exit through the pickup bed floor.
Pickups with cab-mounted gas tanks shall have the gas tank removed. The tank shall be relocated to offer no aerodynamic advantage.
Engine classes allowed are: AA, A, B, C, D, E, XO & XF

5.E.5 Production Mid/Mini Pickup Truck - P/MP

This class is for 1972 and later American and foreign made Mid/Mini sized pickup trucks with a full stock bed. The body is unaltered in height, width or contour with all stock panels mounted in original relationship to each other. Samples of allowed trucks include but are not limited to; Chevrolet S-10, Ford Ranger, Nissan and Toyota.
Any supercharged and/or production full-time, four-wheel drive trucks shall compete in the Modified Category, Modified Mid/Mini Pickup class.
Pickup trucks in this class are considered in the Production Category, Production Class and shall comply with all rules of this category and class. Frame “clips” are allowed in front of

and to the rear of the cab. The original frame shall be in place under the cab. Frame cross members may be moved, modified, replaced or removed.
Covering of pickup beds with tarps or panels is allowed. The cover shall be no higher than the edge of the pickup bed. Aftermarket bed caps are allowed but shall not allow any aerodynamic advantage. Pickups may run with the tailgate raised, lowered or removed. All parachute packs shall be mounted below the bed rail level. The exhaust shall not exit through the pickup bed floor.
Engine classes allowed are: C, D, E, F, G, H and I

5.F DIESEL TRUCK CATEGORY

5.F.1 Unlimited Diesel Truck - /UDT

This class is for diesel-powered trucks only, modified as to be illegal for the Modified Diesel truck class. Any frame and running gear may be used and multiple engines are allowed. The body may be highly modified.
Trucks with a race weight and GVW rating more than 6577kg (14,500 lbs) are allowed unlimited engine displacement. If the truck manufacturer uses a pickup truck cab, documentation must be provided for the GVW of the donor truck. Full size pick-up trucks are limited to a maximum of 750 cid. Trucks based on Mid/Mini chassis are limited to a maximum of 500 cid. There are NO engine displacement class breaks; all vehicles shall compete against the same record. Vehicles that meet the 500 and 750 cid requirement may compete at El Mirage.

Tires shall be certified for vehicle weight and speed of the class record or minimum. Skid plates shall be designed and mounted to prevent any portion of the running gear from damaging the racecourse in the event of tire failure. The skid plates shall NOT be designed to form a belly pan. Roll cages are mandatory and shall be mounted inside the cab. For other technical regulations, refer to other sections of this book. Any fuel is allowed.

5.F.2 Modified Diesel Truck - /MDT

This class is for diesel-powered trucks only, with modified bodies not otherwise legal for Diesel Truck class.

The body may not be altered in height, width or length. Truck frame and running gear shall be used. Trucks shall have a GVW rating of 6577kg (14,500 lbs) or greater and have a minimum race weight of 6577kg (14,500 lbs) and are allowed unlimited engine displacement. Full size pick-up trucks are limited to a maximum of 750 cid. Trucks based on Mid/Mini chassis are limited to a maximum of 500 cid. There are NO engine displacement class breaks. All vehicles shall compete against the same record.

Streamlining behind the cab such as elongated bed or similar body work, not to exceed the height of the stock bed, is allowed. Class 8 trucks may have any fairing between the wheels and frame covers not to extend above the top of the rear tires or frame rail, whichever is higher. The body from the back of the cab forward shall not be altered in height, width or length.

Tires shall be certified for vehicle weight and speed of class record or minimum. Skid plates shall be designed and mounted

so as to prevent any portion of the running gear from damaging the racecourse in the event of tire failure. The skid plates shall NOT be designed so as to form a belly pan. Streamlining devices are NOT allowed.
Roll cages are mandatory and shall be mounted inside of the cab.
This class shall use event diesel fuel. For other technical regulations refer to other sections of this book. Vehicles that meet the 500 and 750 cid requirement may compete at El Mirage.

5.F.3 Highway Hauler - /HH2 & /HH3

American and foreign production diesel-powered trucks of not less than 6577kg (14,500 lbs). The truck shall be unaltered in height, width and contour with all stock panels mounted in the original relationship to each other.
There are NO engine class breaks, and all vehicles shall compete against the same record.
A stock cab shall be used and be mounted in the original location with respect to the chassis. The cab shall be fitted with both driver and passenger seats and with a suitable roll cage. Running boards and steps may be removed. Side mirrors may be removed.
Any diesel-fueled engine supplied by a diesel-engine manufacturer through normal channels may be used so long as the basic original design is retained. The engine may be lowered a maximum of 10.16 cm (4 in.) and setback a maximum of 30.48 cm (12 in.) from the stock location. Only pure water is allowed for water injection systems. The water

injection tank shall be inspected and sealed prior to each record run.

The stock fuel tanks may be removed or retained. The stock fuel tanks shall not contain flammable liquid or vapor. The only approved location for the in-use fuel tank is behind the cab, mounted securely between the frame rails.

The stock exhaust configuration and location shall be retained. The muffler may be removed, but it shall be replaced by exhaust tubing. Shortening of the exhaust system is not allowed.

Trucks shall be equipped with a fifth wheel pad mounted in the original location and with functional air and electrical connections for a trailer. Trucks shall be capable of hauling a trailer.

Trucks shall also be equipped with brake, tail and turn signal lights. Stock headlight housings shall be retained, but the glass may be removed.

In the three-axle class, either a drive axle or a tag axle may be used as the second rear axle. In the case of a tag axle, tires shall bear against the surface of the racetrack. The axle shall be available as a stock item for the truck used.

Wheels and tires shall be appropriate for the weight and speed of the vehicle. Generally, the stock wheels and tires, in excellent condition, will suffice. Wheels and tires designed for heavy, commercial aircraft use are also appropriate and encouraged.

Skid plates shall be designed and mounted so as to prevent any portion of the running gear from damaging the racecourse in

the event of tire failure. The skid plate shall not be designed so as to form a belly pan.
This class shall use event diesel fuel only. Records are subject to approval and will be certified only after comparison with the manufacturer's specifications for the model entered. The entrant is required to provide suitable documentation.
NOTE: All entrants in the Diesel Truck Classes shall have equipment available to remove a disabled vehicle from the racecourse.

5.F.4 Diesel Truck - /DT

This class is for mid/mini and full-size diesel-powered pickup trucks of American or foreign manufacture. The body shall remain unaltered in height, width and contour, with all stock panels mounted in original relationship to each other. Frame "clips" are allowed in front of and to the rear of the cab. The original frame shall be in place under the cab. Frame cross members may be moved, modified, replaced or removed. Air dams (4. CC.1) are allowed. Removal of antenna, wipers, wiper motors, mirrors, trim moldings and emblems are allowed. Any dashboard may be used. Roll cages are mandatory. Down bars are allowed. A radiator and/or intercooler shall be mounted behind the grille and be at least as large as the original intercooler or radiator opening. Any pre-'48 truck may have a 3-inch beauty chop. The firewall and cab floorboards may be modified. If equipment is mounted in the truck bed, it must be lower than the bed rails and not extend thru the bed floor. Any ducting, hoses, etc. must be sealed to the bed to prevent air venting.

Engine swaps (4. N) are allowed. Maximum engine setback is 2% of the wheelbase. Driveline (trans and rear end) swaps are allowed. A driveshaft hoop for each section of the drive shaft is required. Front and rear suspension may be modified or replaced for ride height and/or handling. The wheelbase shall be stock. The stock frame shall be used with necessary reinforcement and modifications for suspension, engine and transmission mounts.

The exhaust may exit behind the cab above the low-pressure area, which for the rules is determined to be a line 45 deg. from the rear cab top extending to the top of the bed rail height. The pipe to floor and bed cap clearance shall be no greater than 1/8 inch to prevent venting of under truck air.

The covering of pickup beds with tarps or panels is allowed. The cover shall be no higher than the edge of the pickup bed. Aftermarket bed caps are allowed but shall not allow any aerodynamic advantage. Pickups may run with the tailgate raised, lowered or removed. All parachute packs shell be mounted below the bed rail level.

This class shall use Event Diesel Fuel, Section 2. B. Fuel may be tested.
Turbochargers and superchargers may be used; these engines will not be handicapped with class jump.
Engine classes allowed are AA, A, B, C, D, E, F, G and H

SECTION 6 DLRA CAR RECORDS

Classes with no listed record are considered as open.

SPECIAL CONSTRUCTION CATEGORY

Streamliner

Blown Fuel Streamliner - /BFS				
Class	**Entry**	**Driver**	**Year**	**Speed (mph)**
AA/BFS	Marlo Treit - Target 550	Les Davenport	2018	345.125
F/BFS	Slaughter Motorsport	Trevor Slaughter	2013	253.700

Unblown Fuel Streamliner - /FS				
Class	**Entry**	**Driver**	**Year**	**Speed (mph)**
/FS				

Blown Gas Streamliner - /BGS				
Class	**Entry**	**Driver**	**Year**	**Speed (mph)**
XF/BGS	FlatAttack	Kurt Dunn	2017	230.047

Unblown Gas Streamliner - /GS				
Class	**Entry**	**Driver**	**Year**	**Speed (mph)**
AA/GS		Allan Murchison	2002 (2001,2000)	177.252 (151.725,149.420)
B/GS		Rod Hadfield	1991	172.89
G/GS		Graham Scott	2016 (2015, 2009)	162.999 (146.873, 127.514)
H/GS		Trevor Clare	2013	200.200

Diesel Streamliner - /DS

Class	Entry	Driver	Year	Speed (mph)
/DS				

Lakesters

Blown Fuel Lakester - /BFL				
Class	**Entry**	**Driver**	**Year**	**Speed (mph)**
AA/BFL		Shaine Benson	2018	256.520
A/BFL		John Lynch	2005 (2002, 2001,2000, 1999, 1996,1995, 1994)	301.729(297.939, 272.809, 270.351, 235.294, 231.86, 219.96, 198.02)
F/BFL	Empty Pockets Racing	Paul Brougha n	2004	203.110

Unblown Fuel Lakester - /FL				
Class	**Entry**	**Driver**	**Year**	**Speed (mph)**
AA/FL		John Dent	2016 (2014, 1995)	255.392 (220.629, 219.96)
A/FL		Alan Fountain	2010 (2009, 1995)	234.940 (227.373, 211.50)
B/FL		Mark Dunn	2019 (2015)	241.172 (234.192, 201.320)
D/FL		Tony Cooke	2018 (2017, 2014)	202.726 (180.605, 177.148)
E/FL		Greg Butler	2015 (2009)	155.851 (152.768)

I/FL		Bob Burgess	2016	119.352

Blown Gas Lakester - /BGL				
Class	**Entry**	**Driver**	**Year**	**Speed (mph)**
E/BGL	Typhoon Racing	Craig Rogers	2019 (2017, 2016, 2014)	253.525 (245.902, 202.020, 127.015)
F/BGL		John Broughan	2004 (2003)	204.127 (145.155)
G/BGL	Empty Pockets Racing	John Broughan	2004	204.127

Unblown Gas Lakester - /GL				
Class	**Entry**	**Driver**	**Year**	**Speed (mph)**
AA/GL		David Bullock	2019 (2018)	242.579 (214.082)
A/GL		Shaine Benson	2016 (2015)	257.382 (255.646)
B/GL		Mark Dunn	2017 (2015, 2013)	251.397 (240.481, 208.225, 206.009)
C/GL		Peter Warren	2017 (2016, 2013)	210.342, 205.456 (178.882)
D/GL	Club Animal	Stephen Charlton	2010 (2009,2006, 2005)	212.854 201.274 (154.526, 125.505)
E/GL	Spirit of Sunshine	James Stewart	2013 (2010,2009, 1995)	215.041 (192.051, 160.413, 146.14)
F/GL		Ray Crathern	2019 (2018, 2017, 2016)	138.321 (131.656, 127.914, 114.669)
G/GL	Empty Pockets Racing	John Broughan	2002 (2001)	130.274 (112.306)

H/GL		Graeme De Courcy Cann	2006 (2005)	68.609 (57.182)
I/GL		Lee Dickens	2015 (2014)	112.298 (105.291)
J/GL		Andy Jenkins	2016	113.578
XF/GL		Bernie Kelly	1995 (1993)	137.59 (114.49)
XO/GL		Greg Telford	2019 (2018, 2016, 2015)	140.713 (133.254, 119.511, 106.341)
V4/GL		Rod Mappin	2000	100.516

Electric

Electric - /E				
Class	**Entry**	**Driver**	**Year**	**Speed (mph)**
II/E		Arthur De Main	2019 (2017, 2015)	89.873 (86.422, 36.331)

Turbine

Turbine - /T				
Class	Entry	Driver	Year	Speed **(mph)**
/T				

VINTAGE CATEGORY

Modified Roadster

Blown Fuel Modified Roadster - /BFMR				
Class	**Entry**	**Driver**	**Year**	**Speed (mph)**

B/BFMR		Neil Raymond	1995	174.10
D/BFMR		Neil Raymond	1994	123.73
E/BFMR		Kevin Saville	1995 (1996, 1994)	184.27 (179.12, 153.77)
XF/BFMR		Mike Davidson	1998 (1996,1995)	176.560 (163.52,162.24)

Unblown Fuel Modified Roadster - /FMR

Class	Entry	Driver	Year	Speed (mph)
A/FMR		Chuck Salmen	2000	250.069
B/FMR		Neil Davis	2015 (2014)	209.644 (185.672)
D/FMR		Gary Tate	1994	130.21
XF/FMR		Mike Davidson	2004 (2002)	158.618 (153.087)

Blown Gas Modified Roadster - /BGMR

Class	Entry	Driver	Year	Speed (mph)
B/BGMR		Rod Hadfield	1990	147.17
D/BGMR		Neil Raymond	1993	96.59
XF/BGMR		Mike Davidson	1998 (1996, 1995,1994)	165.337 (162.58, 160.93, 145.08)

Unblown Gas Modified Roadster - /GMR

Class	Entry	Driver	Year	Speed (mph)

B/GMR		Mat Lagoon	2015 (2013, 1991,1990)	209.448 (179.829, 168.07, 147.17)
C/GMR		Aulis Soderblom	2006 (2005 2004,2002, 2001, 2000, 1999,1996)	185.013 (180.704, 172.670, 159.334, 149.551, 139.643, 131.338, 120.14)
D/GMR	Team Speed	Ray Cooke	2005 (2004, 2002, 2000,1998, 1995)	171.159 (166.535, 161.608, 161.081, 155.783, 140.01)
E/GMR		Paul Greaves	1994	126.11
XF/GMR		Mike Davidson	2004(1999,1991)	146.281 (143.027,129.32)
XXF/GMR		Mike Davidson	1994	145.08
V4/GMR		Chuck Sharpe	2001(2000,1999)	122.050 (86.738,64.379)

Roadster

Blown Fuel Roadster - /BFR				
Class	**Entry**	**Driver**	**Year**	**Speed (mph)**

F/BFR		Casey Hill	2000	139.805

Unblown Fuel Roadster - /FR

Class	Entry	Driver	Year	Speed (mph)
B/FR		Norm Hardinge	2013 (1993)	207.218 (140.26)
D/FR		Garry Tate	1994	130.21

Blown Gas Roadster - /BGR

Class	Entry	Driver	Year	Speed (mph)
XF/BGR		Mike Davidson	1996	162.58

Unblown Gas Roadster - /GR

Class	Entry	Driver	Year	Speed (mph)
AA/GR	Big Knob Racing	Norm Hardinge	2019	194.917
A/GR		Chuck Salmen	1995	232.12
B/GR		Norm Hardinge	2016 (2013, 2006, 2003,2002, 1991)	212.653 (209.132, 195.577, 190.003, 185.854, 168.07)
C/GR		Kevin Parker	1996 (1991)	152.30 (117.93)
D/GR		Peter Watson	1998 (1994)	155.783 (122.32)
E/GR		Jeremy Nunn	1995 (1994,1993)	134.35 (126.11,105.67)
XF/GR		Wayne Mumford	1999 (1991)	143.027 (109.76)

Street Roadster

Blown Street Roadster - /BSTR				
Class	**Entry**	**Driver**	**Year**	**Speed (mph)**
D/BSTR		Neil Raymond	1991	120.14
F/BSTR		Casey Hill	2000	124.965

Unblown Street Roadster - /STR				
Class	**Entry**	**Driver**	**Year**	**Speed (mph)**
B/STR		Rod Hadfield	1991	168.07
C/STR		Ray Charlton	2005 (2004,2001, 1998,1996, 1993)	189.294 (178.076, 170.648, 153.326, 153.01, 110.74)
E/STR		Paul Greeves	1996	108.80
F/STR		Casey Hill	2000	141.220
XF/STR		David Watson	1991	90.50
XO/STR		Paul Greaves	1995	108.80
V4/STR		Cled Davies	2002 (2001)	83.104 (69.772)

VINTAGE Competition Coupe

Blown Vintage Fuel Competition Coupe - /BVFCC				
Class	**Entry**	**Driver**	**Year**	**Speed (mph)**
/BVFCC				

Vintage Fuel Competition Coupe - /VFCC				
Class	**Entry**	**Driver**	**Year**	**Speed (mph)**
/VFCC				

Blown Vintage Gas Competition Coupe - /BVGCC				
Class	**Entry**	**Driver**	**Year**	**Speed (mph)**
/BVGCC				

Vintage Gas Competition Coupe - /VGCC				
Class	**Entry**	**Driver**	**Year**	**Speed (mph)**
/VGCC				

VINTAGE Altered Coupe

Blown Vintage Fuel Altered Coupe - /BVFALT				
Class	**Entry**	**Driver**	**Year**	**Speed (mph)**
/BVFALT				

Vintage Fuel Altered Coupe - /VFALT				
Class	**Entry**	**Driver**	**Year**	**Speed (mph)**
/VFALT				

Blown Vintage Gas Altered Coupe - /BVGALT				
Class	**Entry**	**Driver**	**Year**	**Speed (mph)**
/BVGALT				

Vintage Gas Altered Coupe - /VGALT				
Class	**Entry**	**Driver**	**Year**	**Speed (mph)**
/VGALT				

VINTAGE Gas Coupe

Blown Vintage Gas Coupe - /BVGC				
Class	**Entry**	**Driver**	**Year**	**Speed (mph)**

/BVGC				
Vintage Gas Coupe - /VGC				
Class	**Entry**	**Driver**	**Year**	**Speed (mph)**
/VGC				

VINTAGE Oval Track

Vintage Oval Track - /VOT				
Class	**Entry**	**Driver**	**Year**	**Speed (mph)**
/VOT				
Midget Vintage Oval Track - /MVOT				
Class	**Entry**	**Driver**	**Year**	**Speed (mph)**
V4/MVOT	Flat Attack Racing	Mike Davidson	1990	124.27

CLASSIC CATEGORY

Classic Blown Fuel Altered -/CBFALT				
Class	**Entry**	**Driver**	**Year**	**Speed (mph)**
/CBFALT				
Classic Fuel Altered -/CFALT				
Class	**Entry**	**Driver**	**Year**	**Speed (mph)**
AA/CFALT		Keith Turk	2017	237.514
B/CFALT		Darren Banks	2018	178.474
Classic Blown Gas Altered -/CBGALT				
Class	**Entry**	**Driver**	**Year**	**Speed (mph)**
/CBGALT				
Classic Gas Altered -/CGALT				

Class	Entry	Driver	Year	Speed (mph)
B/CGALT	Team Terraplane	John Harvey	2018 (2017)	179.140 (150.426)

Classic Blown Gas Coupe -/CBGC

Class	Entry	Driver	Year	Speed (mph)
/CBGC				

Classic Gas Coupe -/CGC

Class	Entry	Driver	Year	Speed (mph)
A/CGC		John Dent	2013	202.943
C/CGC		Ian Wheatley	2015 (2013)	201.703 (200.512)

Classic Production -/CPRO

Class	Entry	Driver	Year	Speed (mph)
AA/CPRO		Steve Strupp	2017	199.115
A/CPRO		David Nicholson	2018	199.457
E/CPRO		Christian Roberts	2018 (2015)	130.719 (122.390)
F/CPRO		Stephen Bridge	2014 (2013)	122.808 (117.878)
G/CPRO		Craig Jericho	2016	116.012

Classic Production Supercharged-/CPS

Class	Entry	Driver	Year	Speed (mph)
/CPS				

MODIFIED CATEGORY

Competition Coupe and Sedan

Blown Fuel Competition Coupe and Sedan -/BFCC				
Class	**Entry**	**Driver**	**Year**	**Speed (mph)**
B/BFCC		Aaron Bradshaw	2015	238.505
E/BFCC		James Gunn	2018	199.258
G/BFCC		Michael Drewer	2018	135.685

Unblown Fuel Competition Coupe and Sedan -/FCC				
Class	**Entry**	**Driver**	**Year**	**Speed (mph)**
AA/FCC		Lionel West	2018 (2017, 2010, 2009)	270.270 (267.857, 222.194, 192.328)
B/FCC		Vic O'Neill	2006	120.292
C/FCC		Darren Weeks	2019	172.400

Blown Gas Competition Coupe and Sedan -/BGCC				
Class	**Entry**	**Driver**	**Year**	**Speed (mph)**
B/BGCC		Vic O'Neil	2009	142.970
G/BGCC		Kyle West	2006	122.440

Unblown Gas Competition Coupe and Sedan -/GCC				
Class	**Entry**	**Driver**	**Year**	**Speed (mph)**
A/GCC		Debra Dawson	2010 (2009)	190.799 (190.536)
B/GCC		Steve Williams	2013 (2006)	201.084 (125.918)

C/GCC		Bob Ellis	2005 (2004,2003, 2002)	204.232 (202.520, 183.729, 169.987)
D/GCC		Colin Moore	2005	132.821
E/GCC		Mathew Saunders	2010 (2006,2005)	173.135 (170.228, 126.404)
G/GCC		Skip Telford	2018	107.991

Competition Ute

Blown Fuel Competition Ute -/BFCU				
Class	**Entry**	**Driver**	**Year**	**Speed (mph)**
C/BFCU		Michael Brixton	2014 (2013)	210.526 (176.375)

Unblown Fuel Competition Ute -/FCU				
Class	**Entry**	**Driver**	**Year**	**Speed (mph)**
/FCU				

Blown Gas Competition Ute -/BGCU				
Class	**Entry**	**Driver**	**Year**	**Speed (mph)**
/BGCU				

Unblown Gas Competition Ute -/GCU				
Class	**Entry**	**Driver**	**Year**	**Speed (mph)**
/GCU				

Altered Coupe

Blown Fuel Altered Coupe - /BFALT				
Class	**Entry**	**Driver**	**Year**	**Speed (mph)**
A/BFALT		Rod Hadfield	1999 (1996)	212.244 (188.01)

C/BFALT		Jason VanDyk	2005 (2004)	206.967 (171.428)

Unblown Fuel Altered Coupe - /FALT

Class	Entry	Driver	Year	Speed (mph)
AA/FALT		Lionel West	2016 (2003, 2001)	271.801 (259.067, 229.767)
A/FALT		Steve Strupp	2018 (2017)	206.493
B/FALT		Dave Rosewarne	2017	239.330 (227.115)
C/FALT		Darryn Weeks	2017, (2016)	205.950 (172.546)

Blown Gas Altered Coupe - /BGALT

Class	Entry	Driver	Year	Speed (mph)
B/BGALT		Alan Kulari	2010 (2009)	179.901 (160.513)
D/BGALT		John Ogilvie	2016 (2016)	124.134 (123.244)
E/BGALT		Ray Tully	1996	128.35
G/BGALT		Mick Percy	2016	109.469

Unblown Gas Altered Coupe - /GALT

Class	Entry	Driver	Year	Speed (mph)
AA/GALT		Mark Love	2013 (2006)	259.086, 216.467
A/GALT		Leigh Fielder	2000 (1996)	238.331 (211.50)
B/GALT		Dave Rosewarne	2018 (2016, 2010)	239.378 (212.904, 179.901, 160.513)

C/GALT		Leigh Fielder	2004 (1995)	218.512 (198.50)
D/GALT		David Harris	2014	171.331
E/GALT		Tom Carroll	2016 (1996, 1995)	167.629 (128.35, 109.02)
G/GALT		Dean Smith	1999 (1998, 1995)	119.944 (117.429,114.37)
XF/VGALT		Bill Marshall	1994	86.14

Altered Ute

Blown Fuel AlteredUte - /BFALTU				
Class	**Entry**	**Driver**	**Year**	**Speed (mph)**
/BFALTU				

Unblown Fuel Altered Ute - /FALTU				
Class	**Entry**	**Driver**	**Year**	**Speed (mph)**
C/FALTU		Adrian Reid	2016	225.451

Blown Gas Altered Ute - /BGALTU				
Class	**Entry**	**Driver**	**Year**	**Speed (mph)**
/BGALTU				

Unblown Gas Altered Ute- /GALTU				
Class	**Entry**	**Driver**	**Year**	**Speed (mph)**
B/GALTU		Jeffrey Haley	2018	150.376

Gas Coupe / Sedan

Blown Gas Coupe - /BGC				
Class	**Entry**	**Driver**	**Year**	**Speed (mph)**

AA/BGC		David Patterson	2010	163.369
B/BGC		Norman Bradshaw	2013 (2010, 2009)	250.906, 192.153 (188.333)
D/BGC		Steven Main	2017 (2016, 2001)	205.187 (197.131, 170.003)
E/BGC		James Gunn	2019 (2018, 2016, 2015)	207.015 (195.482, 181.050, 103.684)
G/BGC		John Dickinson	2009	148.490
J/BGC		Leigh Russell	2003 (2001, 2000)	129.682 (112.324,108.692)
XO/BVGC		Dennis Boundy	2009	113.478

Unblown Gas Coupe - /GC

Class	Entry	Driver	Year	Speed (mph)
A/GC		Norm Bradshaw	2005	202.440
B/GC		Alan Lacey	2018 (2010, 2009, 1995)	176.177 (174.039, 168.161, 148.05)
C/GC		Tom Noack	2017 (2016, 2015, 2013, 2004, 2003, 2001, 1999, 1995,1991)	206.469 203.126 (203.126, 199.490, 198.621, 169.141, 160.529, 148.0, 138.846, 124.42, 122.77)
D/GC		Mark Hadfield	2004 (1991,1990)	178.651 (152.82, 88.66)
E/GC		Jeff Jones	2017 (2014, 2009, 2006)	148.668 (135.788, 128.442, 108.169)

F/GC		Don Noble	2006 (2005)	141.187 (137.988)
G/GC		Ian Hancock	2013 (1990)	112.272 (57.28)

Gas Ute

Blown Gas Ute - /BGCU				
Class	**Entry**	**Driver**	**Year**	**Speed (mph)**
/BGCU				

Unblown Gas Ute - /GCU				
Class	**Entry**	**Driver**	**Year**	**Speed (mph)**
/GCU				

Modified Sports

Blown Fuel Modified Sports - /BFMS				
Class	**Entry**	**Driver**	**Year**	**Speed (mph)**
C/BFMS		Gary Satara	2015 (2013)	236.733 (182.408)
E/BFMS		Tom Rabold	2015	225.479
F/BFMS		David Pike	2010	189.883

Blown Modified Sports - /BMS				
Class	**Entry**	**Driver**	**Year**	**Speed (mph)**
E/BMS		Thomas Rabold	2014 (2013)	198.456 (180.605)

Unblown Modified Sports - /MS				
Class	**Entry**	**Driver**	**Year**	**Speed (mph)**
B/MS		Bill Heeremans	2009	130.302

C/MS		Doug Odom	2001	220.237
E/MS		Gail Phillips	2001	205.538
F/MS		Stephen Muller	2010	127.370

Modified Pickup Truck

Modified Pickup - /MP Modified Mid/Mini Pickup - MMP				
Class	**Entry**	**Driver**	**Year**	**Speed (mph)**
C/MP		Adrian Reid	2013 (2001, 1995)	175.987 (118.561, 103.96)
D/MP		Chris Hanlon	2017	154.945
H/MP		Brian Gursansky	1994	101.45
XF/MP		Mike Bowden	1996	138.85
D/MMP		Steve Morgan	2009	152.654

PRODUCTION CATEGORY

Production Coupe and Sedan - /PRO				
Class	**Entry**	**Driver**	**Year**	**Speed (mph)**
AA/PRO		Lawrence May	2017	249.273
A/PRO		John Dent	2004 (2003,2002)	195.047 (187.696, 170.43)

B/PRO		Michael Bowden	2006 (2005,2004, 1993)	177.909 (175.781, 173.210, 127.04)
C/PRO		Wayne Pickles	2010 (2006,2005, 2003,2002, 2001,2000, 1999,1998, 1996,1994, 1991)	217.155 (199.225, 193.579, 190.184, 186.912, 181.689, 168.123, 163.383, 162.339, 142.48, 137.84, 123.46)
D/PRO		Daryl Chalmers	2015 (2013,2002,1995,1994,1990)	214.298 (211.528, 181.846, 179.104, 171.18,165.61, 95.59)
E/PRO		Tharon Hart	2015 (2010, 2009,2004, 2003,2002, 1996,1991, 1990)	187.784 (179.928, 165.039, 160.007, 155.844, 136.798, 121.64, 107.13, 97.68)
F/PRO		Matt Read	2018 (2017, 2003 2002)	168.856 (165.708, 140.274, 125.47)
G/PRO		Keely Shaye Bown	2017 (2009, 2003)	141.515 (127.551, 117.527)
H/PRO		Rebecka Tucker	2006 (1998,1994,1991)	125.226 (117.429, 103.28, 93.02)
I/PRO		Leigh Russell	2002	96.331
J/PRO		Leigh Russell	2003	101.715
XF/PRO		Graeme Holden	1995 (1994,1993)	123.88 (116.21, 97.06)

XO/PRO		Dennis Boundy	2004 (2003)	113.075 (111.124, 107.120)

Production Ute - /PROU				
Class	**Entry**	**Driver**	**Year**	**Speed (mph)**
C/PROU		Adrian Reid	2015	179.569
D/PROU		Chris Hanlon	2013	178.998

Production Supercharged - /PS				
Class	**Entry**	**Driver**	**Year**	**Speed (mph)**
E/PS		Mark Reniers	2015 (2014, 2013)	191.316 (181.736, 171.977)
G/PS		Keely Bown	2016 (2016)	169.364 (142.876)
H/PS		Stephen Muller	2013	115.163

Production Supercharged Ute- /PSU				
Class	**Entry**	**Driver**	**Year**	**Speed (mph)**
/PSU				

Blown Grand Touring Sports - /BGT				
Class	**Entry**	**Driver**	**Year**	**Speed (mph)**
/BGT				

Unblown Grand Touring Sports - /GT				
Class	**Entry**	**Driver**	**Year**	**Speed (mph)**
E/GT		Phil Shephard	2015 (2010, 2009, 2004)	170.068 (161.870, 149.253, 146.127)
F/GT		Stephen Bridge	2010	139.919

H/GT		Hugo Halls	2013	80.504

Production Pickup - /PP				
Class	**Entry**	**Driver**	**Year**	**Speed (mph)**
C/PP		Chris Hanlon	2015 (2013, 1994, 1990)	169.332, (184.985, 117.30, 112.14)
D/PP		Chris Hanlon	2015 (1990)	169.332 (100.04)
E/PP		Mike Davidson	2000 (1994, 1990)	122.299 (112.58, 112.14)
XF/PP		Mike Bowden	1994	100.59
XO/PP		Peter Byron	1994 (1993)	109.28 (101.31)

Mid/Mini Production Pickup - MM/PP				
Class	**Entry**	**Driver**	**Year**	**Speed (mph)**
E/MM/PP	Flat Attack Racing	Mike Davidson	2000	122.299
H/MM/PP		Kay Gursansky	1991	93.02

DIESEL TRUCK CATEGORY

Diesel Truck - /DT				
Class	**Entry**	**Driver**	**Year**	**Speed (mph)**
U/DT		Gavin Manning	2010 (2009, 2005)	155.749 (133.779, 133.769)
AA/MDT		Rob Waters	2017	139.427

NA/DT		Steven Vorwerk	2006	111.707

RETIRED RECORDS

GO-KART				
Class	**Entry**	**Driver**	**Year**	**Speed (mph)**
		Luke Moore	1995	78.03
2008 Superkart		Rod Prickett	2009	112.951

UTE				
Class	**Entry**	**Driver**	**Year**	**Speed (mph)**
A/UTE		Michael Brixton	2010	175.080
		Roy Brand	2006	124.584
C-M/UTE		Chris Hanlon	2004	165.654
C-MF/UTE		Chris Hanlon	2004	174.961

TRACTOR				
Class	**Entry**	**Driver**	**Year**	**Speed (mph)**
		Darren Visser	2006	55.878

SECTION 7 MOTORCYCLE COMPETITION SPECIFICATIONS

Following are the rules governing motorcycles participating in the DLRA Speed Trials.

Section 1 of this rulebook contains General Competition Requirements that apply to all race vehicles.

7.A GENERAL REQUIREMENTS FOR MOTORCYCLES

7.A.1 Rider's License:

Land Speed Record attempts or Record Trials are open to all DLRA members in good standing. A current and valid state driver's license with a motorcycle endorsement is required.

7.A.2 Event Procedures:

Speed Trials operating procedures shall be the same as Section 1.

All motorcycle competitors are reminded to read Section 1 of the rules as this section applies to all competitors and crew.

7.A.3 Production Class Records:

Production records are subject to approval and will be certified ONLY after comparison with the manufacturer's specifications for the model entered. The entrant is required to provide suitable documentation substantiating the production design of the entry.

7.A.4 New Race Vehicles:

It is strongly recommended that all new Special Construction class (A, APS, Streamliner, SC, or SCS) vehicles, or vehicles in these classes that have been extensively modified, be submitted for a pre-event inspection by the Technical Committee. If not practical because of distance, photographs and drawing may be submitted to the Technical Committee Chairman, see Section 9.

7.A.5 Appearance:

All motorcycles entered in an event shall be maintained so as to present a neat appearance. All white or silver (unpainted) vehicles shall show a contrasting color on the body. All owners, riders, and crews are responsible for the maintenance of their pit area and will be expected to present a neat and respectable appearance.

7.A.6 Rule Changes:

Any active DLRA member may submit a request for a rule change or clarification at any time by obtaining the proper form on-line at www.dlra.org.au or the motorcycle tech. trailer at an event. The form shall be completely filled out and shall be submitted by Australia Post mail or submitted on-line to info@dlra.org.au. The forms will be routed through the appropriate technical chair and committees for comment. When all appropriate research is completed, issues will be put on the agenda for discussion at the next scheduled rules meeting *(usually in May, September, January of each year*). Submissions received after *1st May* of any year will not be considered for that year's agenda. All requests for deviations from any rule contained in this Rule Book shall be submitted in

writing in accordance with the RULE DEVIATION PROCEDURE, Section 1.R.

7.A.7 Rider Position:

Any reference to a location relative to the position of a “Rider” will be as follows:
Forward of the rider is defined as any area from the most forward edge of the motorcycle to the silhouette of the rider as viewed from the side, excluding the hands and forearms.
Behind the rider is defined as any area from the most rearward edge of the motorcycle to the silhouette of the rider as viewed from the side.

7.A.8 OEM/Original:

The term “OEM” or “original” is defined as a manufacturer’s original equipment for the particular make, model and year of the motorcycle.

7.B MOTORCYCLE TECHNICAL SPECIFICATIONS & REQUIREMENTS:

7.B.1 Number/Class Identification:

All entries shall have the number and class on each side of the motorcycle, which shall be clearly visible with the rider in the riding position. Numbers shall be a minimum of 7.62 cm (3 in.) high by 2.54 cm (1 in.) wide, class designation characters shall be a minimum of 2.54 cm (1 in.) high; both must contrast with the background on which they are applied.
Number and Class designation are to be in one place, grouped together on each side of the motorcycle.

Number/class may be applied to a surface on the motorcycle or number plates may be used. Number plates shall be securely mounted with a minimum dimension of 15.24 cm (6 in.) by 20.32 cm (8 in.) and a maximum dimension of 25.4 cm (10 in.) by 30.48 cm (12 in.), with a minimum corner radius of 25.4 cm (1 in.). Number plate location is dependent on specific class rules.

7.B.2 Engine Shut-off Requirements:

7.B.2.1 Engine Stop Switch:

All motorcycles shall have a positive-off kill switch that is able to stop a running engine, remain shut off once activated, and be operated without removing the rider's hands from the handlebar grips.

7.B.2.2 Ignition Kill Switch Lanyard:

All motorcycles, **except streamliners,** shall be equipped with a tether-type mechanical device attached to the vehicle and the rider so the engine ignition is shut off if the rider becomes separated from the motorcycle.

7.B.2.3 Fuel Pump Stop Lanyard:

If the ignition kill lanyard does not shut off the fuel pump, the motorcycle shall be equipped with a tether-type shut-off device attached to the vehicle and the rider, so the fuel pump is shut off if the rider becomes separated from the motorcycle.

7.B.2.4 Gasoline Shut-off:

Gasoline class motorcycles shall have a fuel shut-off operable from a normal riding position. A fuel petcock will comply with

this requirement if it is within reach of the seated rider. Lever style non-OEM metal petcocks are allowed. No plastic fuel petcocks, fuel lines, tubes or fuel filters are allowed. Fire resistant materials or coverings are recommended.

7.B.2.5 Fuel Shut-off:

Fuel motorcycles shall have a fuel shut-off operable without moving the hands from the handlebar grips.

7.B.3 Throttle:

A self-closing throttle shall be fitted to all motorcycles.

7.B.4 Controls:

Control levers shall have at least a 1.27 cm (½ in.) diameter round ball end. The handlebars shall locate the hands outside the width of the fork tubes. It is suggested that the configuration of the handlebar(s) locate the thumbs at least 25.4 cm (10 in.) apart. An entrant may be required to demonstrate low speed handling and stability to meet this requirement. Handlebars shall be made of steel, aluminum, titanium or other material approved by the Technical Committee.

7.B.5 Headlights and Lenses:

All plastic or glass lenses shall be taped to retain breakage. Masking or painters' tape is not acceptable for this requirement. On headlights, the tape is limited to the glass lens. To avoid heat build-up, lamps may be rendered inoperative.

7.B.6 Mirrors:

Mirrors shall be removed unless integrated into the fairing. The mirror glass shall be taped or removed.

7.B.7 Foot Rests:

Footrests shall be provided as per requirements of the class entered and the rider shall use them during the entire run. Foot controls shall be operable with feet on the footrests. Only one set of rests is allowed. **Check class requirements for location restrictions. Sidecars, streamliners and sidecar streamliners are exempt from this requirement.**

7.B.8 Tire Requirements:

All tires except special tires for racing as designated by the manufacturer shall have been produced within the last 10 years as of the date of the current event. Sidewall date coding will be
checked.

Tubeless, bias ply type tires may be run with tubes. Tires designed for use on the drive wheel in
drag racing will not be allowed. It is the responsibility of the entrant to check inflation pressures
and tire and wheel condition immediately before and after every run.

The required speed rating is governed by the record speed in the class entered.

0 to **7**0 MPH	Any production tire designed for motorcycle use is permitted.

71 to 1**50** MPH	Tires with an appropriate speed rating must be used. Tires may not be used above their speed rating**.**
151 to 200 MPH	Production tires with a speed rating of V when shaved or W or special tires for racing as designated by the manufacturer
201 MPH+	In excess of 200 MPH special tires for racing as designated by the manufacturer must be used.
265 MPH+	*Contestants shall use LSR or other tires as approved by the Motorcycle Technical Committee, Section 9.*

Any tire deviation or the use of any non-pneumatic wheel/ tire combination shall be submitted in writing in accordance with the RULE DEVIATION procedure, Section 1.R. Any wheel/tire combination that has a square edge at the tread/ sidewall is strictly forbidden.

7.B.9 Valve Stems and Caps:

All tire valve stems shall be fitted with metal valve caps. Tubeless tires shall use metal valve stems. Tube type tires with rubber valve stems that are angled relative to the rotational plane of the wheel shall have those valve stems secured to resist centrifugal force deflection. Safety wire or other approved restraining device is required.

7.B.10 Wheels:

Wheels shall have a minimum nominal diameter of 38.1 cm (15 in.) *or be OEM* except in the Sidecar and Streamliner classes. It

is highly recommended that strict attention be paid to wheel alignment, wheel balance, spoke tension and tire run-out. Non-cross ventilated front wheels are not allowed except in the sidecar and streamliner classes if the wheel is fully enclosed by the body work. It is REQUIRED that front wheels be cross ventilated by an area equal to at least 25% of nominal rim circle area. Non-cross ventilated wheels rear wheels are allowed. Wheel discs may be installed on the rear wheel only and must be installed in a workmanship like manner. Installation methods will be closely scrutinized. No front wheel discs are permitted.

7.B.11 Gasoline:

The addition of a power additive or changes of any nature (other than oil designated for lubrication only) to GASOLINE is prohibited. The penalty for violation of this standard shall be disqualification. See Section 2.B.

7.B.12 Fuels:

In fuel classes, any approved liquid fuel may be used, see Section 2.B.

7.B.13 Front Fenders/ Mudguards:

A front fender, mudguard is optional. If used a front fender/ mudguard must be connected in such a way that it moves in line with the steering and suspension movements. The front fender must have sufficient clearance, so it does not touch any part of the vehicle (apart from the fender mounting points) through any part of its movement. Non-moving static front fenders not allowed.

Fenders must be securely mounted with special attention to plastic fenders. Fenders and mounts should be substantially constructed to resist deflection at high speeds.
All other requirements are subject to Class Rules.

7.B.14 Unsafe Motorcycle:

If a Technical Inspector or the Chief Starter judges a motorcycle unsafe it will not be allowed to compete.

7.B.15 Wheel Retention:

All bolts that retain removable axle caps and other axle-retaining nuts must be safety wired or otherwise secured by visually verifiable means.
Lock washers, self-locking nuts or thread-locking compounds do not meet this requirement.
It is recommended, not a requirement, that all other wheel retention fasteners or pinch bolts and axles are safety wired or otherwise secured by visually verifiable means. **The competition board reserves the option of requiring additional securing means if it is deemed necessary.**

7.B.16 Tow Starts, Push Starts:

Tow starts will not be permitted with the exception of motorcycle streamliners
Push starts involving the use of a second vehicle to push start a motorcycle will not be permitted, with the exception of motorcycle streamliners.
The use of a rope, chain or cable to tow a motorcycle on the lake is not permitted.

7.B.17 Steering Damper:

Required in all classes.

7.B.18 Seat and Saddle:

No part of the seat or saddle or anything to the rear of these may be more than 91.44 cm (36 in.) above the ground when the motorcycle is loaded. Exception: OEM configuration in Production classes only unless specifically permitted by class rules.

7.B.19 Chassis and Steering:

All motorcycle entries shall use handlebars for steering control. All moving parts of the steering system shall operate freely without excessive play. It is recommended that all steering system components be visually inspected on a frequent basis. Fork stops shall stop fork travel before the hands touch the tank or fairing. If a hydraulic steering damper is used, the rod shaft (or piston) may not be used for the fork stops. A functional shock absorber is required for each sprung wheel.

7.B.20 Exhaust:

All exhaust system outlets shall be directed away from rider, the rear tire and the course surface. All blow-off valves, waste gates and burst panels must point away from the rider.

7.B.21 Nitrous Oxide Systems:

Nitrous Oxide bottles and lines are considered a part of the fuel system and governed by all fuel system requirements. Nitrous Oxide bottles shall be securely mounted. Bottle mounting by hose clamps alone is not sufficient. Vehicles with Nitrous Oxide systems shall be visibly identified as such and the location of the bottle(s) shall be clearly indicated. Nitrous oxide

installations shall provide crash protection for the bottle shut off valve. When competing in the gas classes, all nitrous oxide bottles, lines, and solenoids shall be removed. Injectors may be removed or capped.
The Nitrous Oxide bottle pressure relief valve shall be vented away from the engine and rider, if located in an enclosed area, and shall be vented to the outside by a rigid line.
Nitrous oxide systems shall be equipped with a device that shuts off the nitrous oxide if the rider becomes separated from the motorcycle.

7.B.22 Chain Guard:

All chain or belt driven motorcycle entries (Streamliners see Section 7.H.22) shall be equipped with a steel or aluminum chain or belt guard. If the guard is made of steel it shall be at least 3/32 in. thick, or if aluminum, at least 1/8 in. thick. Guards shall be securely mounted in at least two places. The top run shall be at least 1-1/2 times the overall width of the chain or at least ¼ in. wider than the belt.
The chain/belt shall be guarded from the center of the front sprocket to the rear most edge of the rear sprocket measured vertically. Primary drives or exposed clutches shall have a side cover to prevent rider from getting entangled. OEM chain guards may not be adequate.

7.B.23 Brakes:

Rear brakes are required and shall be an internal expanding drum type or disc brake. Actuation may be from a foot pedal or handlebar lever.

7.B.24 Ballast:

Ballast may be used in all categories. All ballast shall be located ahead of the rear axle (except Sidecars and Streamliners). Ballast mounting tabs can extend past the axle. Ballast shall be securely mounted, i.e. bolted to the frame structure. The use of hose clamps, wire, strapping, tape, and tie wraps, etc. for securing weight or ballast is prohibited. Ballast shall not be used to streamline the vehicle. Visible ballast is not allowed in Production classes.

7.B.25 Fuel Systems:

The complete fuel system shall be well constructed and securely mounted. The fuel fill cap/cover shall fit securely. All non-valve portions of fuel or gas lines (including saddle tank crossover lines), shall have fire-resistant or fireproof connecting lines and fittings. Aero/quip fire sleeve cover meets this requirement.

Plastic fuel lines are not permitted, except certified clear fuel lines, clearly marked on the fuel line by the manufacturer as for fuel application. All fuel lines not using OEM fittings must use a metal clamp on each connection of flexible fuel line. Nitrous Oxide cylinders or any other type of oxidizer cylinder are considered the same as fuel tanks.

7.B.26 Batteries:

All batteries shall be properly secured with metal hold-downs**,** framework and fasteners. Plastic tie-downs are not allowed. OEM battery hold-downs may not be adequate**.**

7.B.27 SUPERCHARGED:

For purposes of classification, Blown (supercharged) will be an artificially-aspirated

engine with a mechanically-driven supercharger and/or exhaust-driven turbocharger powered by the primary engine. The supercharger or turbocharger must pressurize the intake system.

7.B.28 Windshields and Windscreens:

All windshields and windscreens shall be made of shatter-resistant plastic, such as polycarbonate (Lexan).

7.B.29 Cooling System:

All liquid cooling systems utilizing non-braided circulation lines shall have metal clamps at each connection. The use of plastic tubing in a cooling system is not allowed. No flammable or combustible coolants are allowed. *All glycol-based coolants are banned. Redline brand 'water wetter' is allowed.*

7.B.30 Externally mounted equipment e.g. cameras:

All externally mounted equipment e.g. cameras, data-loggers, GPS units etc. must be securely mounted and have a separate lanyard fitted which attaches the unit to the race vehicle. All vehicles fitted with such equipment must be presented at technical inspection with that equipment fitted to the vehicle.

7.B.31 Front Wheel Drive and Two Wheel Drive:

Front wheel drive and two-wheel drive systems are allowed only in Special Construction or in the Production Category where the competing vehicle was originally equipped with front wheel drive or two-wheel drive.

7.C RIDING APPAREL:

All motorcycle riders are required to use the following riding equipment except where clearly inconsistent with Streamliner rules.

7.C.1 Rider's Helmet:

All riders shall wear a full-face helmet with face shield, which shall meet Snell Foundation M2010 or later specifications or **Current FIM Homologation or** European ECE 22.05 or E 22.05, 2010 or *Australian/New Zealand Standard AS/NZS 1698:2006* or newer. Helmets with a Snell rating of 2005 expired on January 1, 2017, helmets with a Snell rating of 2010 will expire on January 1, 2022. No open face helmets will be allowed. Helmets will be visually inspected at least once each year. Helmets shall be undamaged, unmodified and in serviceable condition. Eyeglasses worn under the helmet shall be shatterproof. Riders shall demonstrate proper helmet fit and "roll-off" resistance. **Helmets for motorcycle streamliners shall comply with section 3.A.2.**

Helmets with a yellow strap are not motorcycle helmets and will not be accepted for motorcycle use, except in motorcycle streamliners.

All helmets must be less than ten years old.

7.C.2 Leathers:

One-piece or two-piece 350 deg. (zipped together) leathers are required. Where two-piece leathers are used the zipper must be sewn to the leather. Suits made of synthetics material are not permissible. The use of stretchable Kevlar and perforated materials in non-critical areas is permitted. Leathers cannot be too big or loose.

Critical area (knees, elbows, forearms, shoulders) armour or 2-layers of leather is highly recommended. Due to invisible flames, riders of motorcycles burning fuels of Methanol content are recommended to wear Nomex underclothing or something of similar nature.
A back protector is mandatory in all classes.

7.C.3 Boots:

Zipper, buckle, or lace-up leather boots of substantial construction are required and shall be at least 20.32 cm (8 in.) high.

7.C.4 Gloves:

Motorcycle leather gloves that cover the entire hand and fingers
with a minimum 2-inch gauntlet cuff and wrist enclosure are mandatory. Additional safety features such as knuckle, palm and/or finger protection with other engineered materials are acceptable.

7.C.5 Body Armour:

Where the class record is Above 200 MPH, full body armour is highly recommended. It is highly recommended that fireproof undergarments be used where the existing class record is above 200 MPH. A back protector is required in all sit on motorcycle classes

7.D CLASSIFICATION of DISPLACEMENTS, FRAMES, ENGINES, and ENGINE TYPES:

NOTE: Motorcycle classes are listed in order of displacement, frame type and engine type.

7.D.1 Designated Frame Class

P	Production
M	Modified
A	Special Construction
MPS	Modified Partial Streamlining
APS	Special Construction Partial Streamlining
SC	Sidecar
T	**Trike**
SCS	Sidecar Streamliner
S	Streamliner

7.D.2 Designated Engine Class

BF	Supercharged Engine: Fuel
BG	Supercharged Engine: Gasoline
F	Modified Engine: Fuel
G	Modified Engine: Gasoline
P	Production
PB	Production Supercharged
CBF	*Classic Supercharged Engine: Fuel*
CBG	*Classic Supercharged Engine: Gasoline*
CF	*Classic Modified Engine: Fuel*
CG	*Classic Modified Engine: Gasoline*
PC	*Production Classic*
PBF	Supercharged Push Rod Engine: Fuel
PBG	Supercharged Push Rod Engine: Gas
PF	Push Rod Engine: Fuel

PG	Push Rod Engine: Gasoline
PP	Production Push Rod
PV	Production Vintage
VBF	Supercharged Vintage Engine: Fuel
VBG	Supercharged Vintage Engine: Gasoline
VF	Vintage Engine: Fuel
VG	Vintage Engine: Gasoline
Ω	Steam, Turbine or Electric

7.D.3 Engine Displacement Classes:

Engine Classes are shown in cubic centimeters: 50, 100, 125, 175, 250, 350, 500, 650, 750, 1000, 1350, 1650, 2000 and 3000 where permitted and 3001 and above where permitted. Displacement shall be greater than the maximum allowable for the next lower class. To permit minor reconditioning of worn cylinder blocks in classes other than Production, it is permitted to increase cylinder bore diameter .508 mm (.020 in.) beyond that which provides maximum displacement for the class only if the OEM bore diameter is within .508 mm (.020 in.) of the maximum class displacement. In all cases, the resulting displacement shall be exceeded to qualify for the next higher class. The .508 mm (.020 in.) will be discounted for record certification and will be noted on the certification card and in the logbook.

Vintage engines are allowed +1.27 mm (.050 in.) overbore, see section 7. J.10.

7.D.4 Frame Class

Frame Class	Engine Classes Available	Max Displacement	Max No. of Engines:
P	P, PP, PB, PPB, PV	3000	1
M	All except UG, UF, P, PP, PB, PPB & PV	3000	1
MPS	All except UG, UF, P, PP, PB, PPB & PV	3000	1
A	All except UG, UF, P, PP, PB, PPB, PV & Ω	3001 & above	4
APS	All except UG & UF, P, PP, PB, PPB, & PV	3001 & above	4
S	All except P, PP, PB, PPB & PV	3001 & above	4
SC	All except UG, UF, P, PP, PB, PPB, PV & Ω	3001 & above	2
SCS	All except P, PP, PB, PPB & PV	3001 & above	4

Classes defined and not restricted under items 7.D.1, 7.D.2, 7.D.3 and 7.D.4 are open for competition.

7.E PRODUCTION

This class is limited to production, street-legal motorcycles of which 500 or more have been produced and which are available for sale to the general public through retail motorcycle dealers. Motorcycles in this class shall be equipped with full lighting equipment, frame, forks, wheels, brakes, gas and oil tank (if OEM), fenders and seat. The motorcycle must appear identical in all respects to the production model it represents, including the intake air box and exhaust system, unless an item is added, removed, replaced or modified as required, to comply with the safety requirements of this rule book, or is allowed by the Production frame class rules. The exhaust system, looking at the end (down its centerline) shall be unmodified, i.e. the exit diameter of the canister (muffler) cannot be enlarged. This comparison will be made when the bike is assembled as ready to run. Any performance modifications shall be out of view.

Custom painting or decal removal does not violate the production class appearance rule however smoothing, filling, removal of badges, emblems or garnish trim or other physical changes are not permitted. Production class records are subject to approval and will be certified ONLY after comparison with the manufacturer's specifications for the model. The entrant is required to provide suitable documentation substantiating the production design of the entry at the time of the record certification inspection.

The only modifications which may or shall be made are as follows:

7.E.1.1 Handlebars:

Any shape may be fitted to OEM handlebar mounts except those which extend more than 38.1 cm (15 in.) above, 10.16 cm (4 in.) in front of, or 10.16 cm (4 in.) below the OEM handle bar mounts. Controls and switches must remain OEM.

7.E.1.2 Footrests:

OEM rider footrests must be used. Passenger footrests and their supporting brackets shall be removed unless integrated into the frame or used for a purpose other than holding the footrest, e.g. muffler bracket.

7.E.1.3 Side and Center Stands:

These may be removed.

7.E.1.4 Air Cleaner Element, Toolbox, and License Plate Bracket:

Air cleaner element and toolbox may be removed. The license plate bracket must remain.

7.E.1.5 Number/Class:

Number plates, if used, shall be located behind the rider, ahead of and above the rear axle centreline.

7.E.1.6 Lighting Equipment and Instruments:

Shall be exactly the same as fitted to the original model when it was sold. Adjustable headlights must have the lens mounted in the vertical position. Reflectors, turn signal lights, and their supporting brackets may be removed only if not integrated with the body fairing. To avoid heat buildup, lamps may be rendered inoperative. Visible Non-OEM items are not permitted, except for required safety equipment.

7.E.1.7 Fairings, Windshields, Seats and Side Panels:

Parts that are factory equipment standard for the particular model shall remain on the motorcycle and be unaltered in height, width, and contour.

7.E.1.8 Tires:

See Section 7. B.8.

7.E.1.9 Chain Guard:

See section 7. B.22.

7.E.1.10 Wheel Rims:

Rims may be changed only if necessary, to obtain tires that meet the necessary tire requirements.

7.E.1.11 Suspension Height Adjustment:

OEM Specification for minimum ground clearance shall be met.

7.E.1.12 Rear Sprocket:

Front and rear sprocket/pulley size is optional; OEM chain size/belt width must be maintained.

7.E.1.13 Accessories/Options

Any accessory or option available for the make, model and year of the motorcycle will only be allowed if it is delivered from the factory direct with the accessory or option installed.
Accessories and Options that are installed after delivery from the factory are not allowed. **The installation of a GoPro-type camera and mounting apparatus is allowed.**

7.F MODIFIED PRODUCTION- M, MPS

The Modified Class is intended for “modified” production models and not purpose-built racing bikes.
This class includes all On Road, On-Off Road and Off Road only models and limited production models (more than 50).
These classes do not include factory produced road racing or any other specialized racing or models.
The requirements for this class include:

An OEM frame must be used. Steering head angle may be altered but must remain in its original location. Swing arm length, type and mounting method may be altered. Brackets, braces, mounts, gussets, etc. may be moved, modified or removed. Perimeter type frame engine cradle tubes must remain unmodified. Spar-style main frame spars must remain unmodified. “Main frame spars” are defined as the large formed tubes which connect the steering neck to the engine mounts and swing arm pivot. The engine shall be from the same manufacturer as the frame.

A single engine with maximum displacement limited to 3000cc.

A maximum wheelbase not to exceed the original OEM specification plus 10%. Entrants shall provide acceptable documentation for record certification.

Handlebar grips and rider seating position shall be above the top of the rear tires with the rider seated, unless original OEM design.

Gas tanks, if not original equipment to the production model, shall have a minimum capacity of 5 liters or 1.32 gallons.

OEM lights, instruments, fenders, gas and oil tanks, seat, forks, swing arm, shocks, brakes and wheels are optional.

Bikes that meet the requirements for the Modified Production Class by definition cannot run in the Special Construction Class.

7.F.1 Foot Rests:

Shall be ahead of the rear axle at least by 15.24 cm (6 in.)

7.F.2 Optional Exhaust Systems:

Exhaust pipes may not extend behind rear edge of **the motorcycle**.

7.F.3 Number/Class Designation Plates:

See Section 7. B.1.

7.F.4 Fenders:

7.F.4.1 Front Fenders:

A front fender is optional, and if used shall comply with the following: the front wheel and tire shall be visible from either side for a continuous 210 deg. of their circumference. The front of the fender shall not extend lower than 12.7 cm (5 in.) above a horizontal line drawn through the front axle. The perimeter of the fender shall not be farther than 4.445 cm (1.750 in.) from the tread. The sides of the fender may fair into the fork tubes but shall not be over 5.08 cm (2 in.) wider overall than these parts.

7.F.4.2 Rear Fenders:

Rear fenders shall extend rearward to a point not less than a vertical line drawn through the rear axle. A seat that covers the

rear wheel to the vertical line may substitute for the fender requirements. All fenders shall be of sufficient strength to resist deflection at speed.

7.F.5 RESERVED

7.F.6 Axles:

All axles shall be of steel alloy or titanium.

7.F.7 Forks:

The forks shall be of sufficient strength for the motorcycle in question. Center hub steering and equivalent or derivative of this design is not permitted in this class unless factory produced for the model.

7.F.8 Brakes:

See section 7. B.23.

7.F.9 Chain Guard:

See section 7. B.22.

7.F.10 Engines:

Only a single engine with a maximum engine displacement of 3000cc is allowed. Multiple engines are not permitted in this class.

7.F.11 Open Class – Modified Production - M

No streamlining is permitted in the open motorcycle class. Streamlining is defined as any devices or objects forward of the rider **(see 7.A.7)** that have the apparent effect of directing, limiting, or controlling airflow around the motorcycle or rider.

1. Seat or tail section shall conform to partial streamlining rules.
2. Un-modified OEM air inlet scoops, OEM instruments, OEM instrument panels and/or OEM headlights mounted with un-modified OEM mounts in the OEM location are allowed in the Open class and *therefore* meet the non-streamlining rule.

Documentation to verify OEM parts shall be made available to the inspector by the competitor.

Motorcycles using non-OEM instruments, or OEM instruments not using OEM mounts, must be mounted within an area defined as no farther forward than 15.24 cm (6 in.) in front of the leading edge of the upper triple clamp nor more than 10.16 cm (4 in.) above the top of the upper triple clamp nor more than 5.08 cm (2 in.) below the top of the upper triple clamp nor wider than 2.54 cm (1 in.) outside of each fork tube.

7.F.12 Partial Streamlining – Modified Production - MPS:

All O.E.M body work, seat, tail section or fenders for the specific production model year is allowed but documentation to verify OEM parts or exact replicas of those components shall be made available to the inspector by the competitor.

The following rules apply to motorcycles using **non-**OEM components (or replicas of those components), or using a fairing, bodywork **seat,** tail section **or fenders** on a production model that was not originally equipped with **those** components.

No part of the fairing ahead of the front axle may be lower than the top of the front rim at the axle vertical centerline or be forward of the front edge of the rim. Front Fender see Section 7.F.4.1. There shall be no streamlining forward of the front edge of the front rim. There shall be no streamlining other than a seat**,** tail section or fender to the rear of the rider's body, and the seat, tail section or fender may not cover any of the wheel when viewed from the side. If a streamlined seat, tail section or fender is used it cannot extend further to the rear than a vertical line at the rear edge of the rear tire or be more than 91.44 cm (36 in.) from the ground with the rider seated on the bike. It shall be possible to see all of the rider completely from either side, except the hands and forearms. As viewed from directly above it shall be possible to see all of the rider in any and all riding positions, <u>except the hands, forearms, legs and feet</u>. It is forbidden to use any transparent material to avoid the application of these rules. Fairings or bodywork shall have a minimum of three (3) separate mounting points.
The OEM fairing, bodywork and tail section for the specific production model THAT EXCEEDS THE ABOVE are allowed**.** Fairing and tail section shall be mounted in a conventional manner and all bodywork pieces shall be mounted in their original relationship to each other. Replacement non-OEM fairings, bodywork and tail sections shall be an exact replica of the OEM parts. Documentation to verify conformation of non-OEM parts to OEM parts shall be made available to the inspector by the competitor.

7.G SPECIAL CONSTRUCTION – A, APS

The Special Construction class is intended for purpose-built race bikes, not production bikes with minor modifications. A special construction frame is unlimited in design, except for the class requirements of this section. This class includes factory produced road racing or any other racing “works” models.

Bikes in this class must have either a full APS fairing or comply with two of the following requirements:

- Two or more engines
- Engine displacement greater than 3001cc
- Seat base lower than top of rear tire with the rider seated on the bike
- Design items not permitted in the Modified Production class
- Center hub steering *unless OEM*

All components shall have sufficient strength to ensure stability and safety. Weld integrity and fabrication methods will be closely scrutinized during the inspection process. The technical committee may require Non-Destructive Test Certification of components and/or stress analysis of the design.
A bike entered in the Special Construction Class cannot be entered as a Modified Production Class entry within the same racing season.

7.G.1 Foot Rests:

Footrests shall be provided, and the location is optional.

7.G.2 Optional Exhaust Systems:

Exhaust pipes may not extend beyond the rear edge of the motorcycle**.**

7.G.3 RESERVED

7.G.4 RESERVED

7.G.5 Gas Tank:

The gas tank shall be mounted and constructed in a workmanship-like manner.

7.G.6 Wheels:

Wheels shall have a minimum nominal rim diameter of 38.1 cm (15 in).

7.G.7 Brakes:

See section 7. B.23.

7.G.8 Chain Guard:

See Section 7. B.22.

7.G.9 RESERVED

7.G.10 Open Class: – Special Construction - A

This class is limited to purpose built “bare bones” race bikes stripped of all aero and street use parts. No streamlining is permitted in the Open Special Construction class. Streamlining is defined as any devices or objects forward of the rider **(see 7.A.7)** that have the apparent effect of directing, limiting, or controlling airflow around the motorcycle or the rider. A front fender is optional, and if used shall comply with the following: the front wheel and tire shall be visible from either side for a continuous 210 deg. of their circumference. The front of the

fender shall not extend lower than 12.7 cm (5 in.) above a horizontal line drawn through the front axle. The perimeter of the fender shall not be farther than 4.445 cm (1.750 in.) from the tread. The sides of the fender may fair into the fork tubes or tire but shall not be over 5.08 cm (2 in.) wider overall than these parts. If a seat, tail section or fender is used, it **shall** not extend more than 7.62 cm (3 in.) past the **rear most edge** of the rear tire or cover any part of the wheel when viewed from the side. No part of the tail section shall be lower than the top of the rear rim, or over 91.44 cm (36 in.) from the ground, with the rider seated on the bike.

It shall be possible to see all of the rider from either side. As viewed directly from above, it shall be possible to see all of the rider, in any and all riding positions except for the legs and feet. It is forbidden to use any transparent material to avoid the application of these rules.

Number plates, if used, shall be located behind the rider, and ahead of and above the rear axle centerline.

7.G.11 Partial Streamlining: - SPECIAL CONSTRUCTION - APS

If a streamlined seat/tail section is used, it cannot extend further to the rear than 25.4 cm (10 in.) beyond the rear edge of the rear tire. No part of the seat/tail section may be more than 101.6 cm (40 in.) above the ground with the rider seated. No part of the seat/tail section behind the rear axle may be closer than 10.16 cm (4 in.) from the ground with the rider seated.

It shall be possible to see all of the rider completely from either side, except the hands and forearms. As viewed from directly

above it shall be possible to see all of the rider, in any and all riding positions, except the hands, forearms, legs and feet. It is forbidden to use any transparent material to avoid the application of these rules. Fairings or bodywork shall have a minimum of three (3) separate mounting points.
No part of the fairing ahead of the front axle may be lower than the top of the front rim at the axle vertical centerline or be forward of the front edge of the rim. There shall be no streamlining forward of the front edge of the front rim.
Front fender is optional, and if used shall comply with the following: front wheel and tire shall be visible from either side for a continuous 180 deg. of their circumference. The front of the fender may not extend lower than a horizontal line drawn through the front axle. The perimeter of the fender may not be further than 4.445 cm (1.750 in.) from the tire tread. The sides of the fender may fair in the fork tubes/sliders/tire, but must not be over 5.08 cm (2 in.) wider overall than these parts.
For non-conventional designs not using fork tubes/sliders, fenders may be 5.08 cm (2 in.) wider on each side of the tire.

7.H STREAMLINER - S

A Streamliner is a motorcycle designed so that it is not possible to see the complete rider in the normal riding position from either side or above. Wheelbase is unlimited and shall make a single track. Power shall be transmitted *only* through the wheel*s of the motorcycle*.
Steering shall be done with the front wheel only.
The vehicle, unloaded, must be capable of being leaned at an angle of 20 deg. (minimum) from the vertical position without

touching the ground, other than the tires, without prior contest board approval.
All components shall have sufficient strength to ensure stability and safety. Weld integrity and fabrication methods will be closely scrutinized during the inspection process. The technical committee may require Non-Destructive Test Certification of components and/or stress analysis of the design. Prior to starting construction, it is strongly suggested that the constructor submit final design prints to the technical committee for evaluation of compliance with rules and safety considerations.
All Motorcycle Streamliners and Side Car Streamliners must have the same fire access doors as Cars. See Section 5.A.

7.H.1 Sealed Firewall:

There shall be at least one sealed firewall between the rider and engine/fuel compartment(s) as well as adequate drains in engine/fuel compartment(s). All linkage and controls that pass through the firewall(s) shall go through the upper half to avoid fuel seepage into the rider compartment.

7.H.2 Fire Extinguishing System:

All Streamliners shall have a rider-controlled fire extinguisher system directed to the engine/fuel compartment. If an automatic heat sensing control is used, a manual control shall also be fitted. Refer to Section 3.Q for additional requirements.

7.H.3 Driver/Rider Suit:

A complete, approved driver/rider suit conforming to SFI specification 3.2A/15 is REQUIRED. Gloves and boots shall be

SFI specification 3.3/5 rating. A SFI specification 3.3 head sock shall be worn under the helmet.
All drivers/riders shall wear a helmet, driver's suit, boots, gloves, head sock or helmet skirt, and head and neck restraint system. (See7. H.4) Protective underwear is highly recommended. All items shall
be in clean and serviceable condition. Drivers/riders are advised not to wear synthetic material under the driver's suit. All driver suits shall be SFI certified, have the SFI rating tag attached, and comply with
the chart below.
MINIMUM REQUIREMENTS
All motorcycle streamliners and sidecar streamliners under 175 MPH Suit SFI.3.2A/10 or /5 with full Nomex underwear Boots SFI.3.3/5 Gloves SFI.3.3/5 Head Sock SFI 3.3

All rear engine motorcycle stream liners and sidecar streamliners over 175 MPH
Suit SFI 3.2A/15
Boots SFI 3.3/5
Gloves SFI 3.3/5
Head Sock SFI.3.3
All front engine motorcycle streamliners and sidecar streamliners over 175 MPH

7.H.4 Roll Cage:

The roll cage extends from above and behind the rider’s head to in front of the rider’s feet. The roll cage shall be constructed to surround the rider and protect the entire rider’s area from impact, and must include both bottom and side protection.

Required roll cage tubing minimum size is is 3.175 cm (1-1/4 in.) outside diametre with 2.286 mm (0.090 in.) nominal wall thickness, mechanical steel tubing. Low carbon (mild) steel tubing is recommended. Chromoly E4130 tubing is alos permitted. Comply with appropriate welding procedures. No galvanized pipe, black water pipe or threaded fittings are permitted. The roll cage structure shall incorporate a minimum of two (2) roll bars, one forward of and one behind the rider's head. The roll bars shall be connected by a tube of the same dimensions at about helmet mid-height on both sides. It is strongly recommended that tubing of the same dimensions be used to adequately angle brace at least one of the roll bars to the shoulder rail on both sides. The roll bars shall be tied together and capped with a steel plate 2.286 mm (0.090 in.) thick. The cap shall cover the upper 140 deg. of the roll bars. The roll bar shall be braced with a tube of the same dimensions on each side. Rider head movement shall be limited to no more than 5.08 cm (2 in.) to each side, top, or rear, with rider's head in the normal operating position. Gussets are required at tube junctions of roll hoops and shoulder rails. An example of acceptable gussets and welds is shown in Figure 2. Roll cage padding meeting SFI specification 45.1 for round tube roll cage padding and SFI specification 45.3 for flat roll cage padding is required in the vicinity of the driver's helmet.
Forward movement: All motorcycle streamliners presented for inspection shall have an engineered and tested SFI spec 38.1 type head and neck restraint system. All motorcycle streamliners shall have an engineered and tested SFI spec 38.1 type head and neck restraint system.

Lateral movement: Shall be constructed such that the helmet cannot exit the outer plane of the roll cage, see Section 3. A.3. The seat or roll cage structure or
suitable restraint system, such as a restraint net, swing-away bar or similar such device, shall provide restriction to lateral head movement of less than 2" per side inclusive of structure deflection, and at a minimum extend to the forward-most portion of the helmet, see Section 3.B.1.

7.H.5 Seat Belts and Shoulder Harness and ARM/LEG Restraints:

All motorcycle streamliners and sidecar streamliners must be equipped with a complete competition seat belt and shoulder harness with shoulder, lap, and crotch straps as required in Section 3.d.2 Seat Belts. Limb restraints to the central harness buckle shall be used, see Section 3.D. Approved limb restraints with a SFI 3.3 spec dated 2006 or later are required in all streamliners.

7.H.6 Rider Compartment:

The rider compartment shall be free from sharp edges, protrusions, brackets, etc., within close proximity to the rider. A rigid inner liner shall be provided to retain legs within roll cage structure. The rider compartment shall be equipped with a fresh air intake or breathing system to carry away fumes. All air breathing and cooling systems that supply air to the driver must have fire retardant protection on the hoses that supply air. The seat shall be constructed of a metal or alloy sufficient to retain the driver under high “G” loading. Composite seats must be pre-approved by the technical committee, no plastic or

fiberglass seats will be allowed. Secondary flooring, metal sheeting in the driver's compartment for the purpose of retaining the rider and appendages in the event of step pan or belly pan tear away must be added, see 3.G. No flexible fuel lines of any kind allowed in driver's compartment.

7.H.7 Windshields:

All windshields shall be of shatter-resistant plastic, such as Lexan®, and provide 120 deg. of adequate horizontal forward vision.

7.H.8 Fuel Shut-off:

A remote fuel shutoff to disable pump operation that can be easily actuated from the rider compartment shall be fitted. All electric fuel pumps shall have an inertial switch in the circuit to disable pump operation.

7.H.9 Fender:

A bulkhead or fender shall be fitted around any tire within the rider compartment. The fender shall be metal construction or shall be covered with a ballistic shield.

7.H.10 Canopy:

If a canopy is used, the rider shall be able to exit from the streamliner without assistance whether the machine is upright or on its side. The canopy shall be clearly marked on the outside with directions for opening by emergency personnel. Rider compartment canopy shall have a release allowing it to be opened quickly, without hand tools, from both the inside and outside the vehicle. The canopy must be securely closed in competition by the employment of a mechanical fastening. The

steering mechanism can move, but the canopy shall not be attached to the steering mechanism.

7.H.11 Tires and Wheels:

Tire and wheel sizes are unlimited. Tires shall meet the speed rating as shown in Section 7. B.8. In all classes over 200 MPH, or for wheels having a diameter of 73.66 cm (29 in.) or greater, wheels manufactured for racing or reinforced per Section 2.G shall be used.

7.H.12 Test Runs:

A series of test runs will be required of all Streamliners and riders. Vehicle stability and rider licensing evaluations will be conducted at speed increments specified in Section 1.M, Driver Licensing, until maximum speed is attained. Each run will be observed by the Contest Board observers and approved before advancing to the next higher speed. All speed tests will be terminated with a parachute test.

7.H.13 Parachute:

A parachute is required on all Streamliners. Streamliners going over 250 MPH are required to have two parachutes, one for high speed and one for low speed. Parachute release mechanism shall be mounted in a position allowing it to be activated without removing the rider's hands from the steering mechanism. It is required that automatic mechanisms be installed that will actuate when the machine is laid over 50 deg. on enclosed tail streamliners, and 80 deg. on open tail streamliners. A demonstration of the parachute system including deployment is required at each event. All non-manual

parachute release systems must have a redundant manual release as a backup.

7.H.14 Steering:

All steering systems shall be direct, gear or link type. The handlebars shall have adequate clearance and the mounting shall have sufficient support to prevent unwanted movement. All moving parts shall operate freely without excessive play. The steering linkage shall have sufficient clearance between the body and the chassis. All components shall have sufficient strength to ensure stability and safety. Weld integrity and fabrication methods will be closely scrutinized during the inspection process. The technical committee may require Non-Destructive Test Certification of components and/or stress analysis of the design.

It is recommended that all steering system welds be visually inspected on a frequent basis. Competitors may wish to periodically qualify exceptionally critical welds by means of x-ray or magnaflux. If a potential problem is observed in the inspection process the Technical Committee may require the competitor to provide an x-ray or magnaflux certification.

All spherical ends (i.e., Heim) used in steering systems shall not be constructed of aluminum and shall have washers with a larger OD than the Heim to retain the joint should separation occur (solid type Heim joints are required). All bolts used in steering linkage shall be at least grade 5. For vehicles with long steering shafts the shaft shall be collapsible or have a secondary steering shaft stop installed.

7.H.15 Brakes:

All Streamliners shall be equipped with a rear wheel brake as required, see section 7. B.23.

7.H.16 Number/Class Identification:

Streamliners shall have a minimum number/letter area of 25.4 cm (10 in.) x 30.48 cm (12 in.) on both sides of the body.

7.H.17 Tanks:

Fuel tank, oil tank, and battery (unless sealed in an acid spill-proof box, Section 7.H.20) shall be separated from the driver/rider by a firewall. No fuel lines may be routed through the rider compartment.

7.H.18 Engine:

No more than four (4) engines are permitted. Maximum total engine displacement is unlimited.

7.H.19 Skids:

Streamliners using skids shall have a positive lock in both the ‘up’ and ‘down’ positions. The shoe or contact area shall have a good form of ski-nose with a surface-friendly design. Wheels may be used as skids. Skids are to be locked in a retracted position as soon as the motorcycle becomes stable.

7.H.20 Batteries:

All batteries shall be properly secured with metal framework and fasteners. Batteries may be mounted in the driver’s compartment if sealed in an acid spill-proof box. All streamliners shall be equipped with a main battery disconnect switch. The disconnect switch shall be visible and clearly marked and placed in a location that allows shut-off if the streamliner has fallen on either side.

7.H.21 Towing:

All streamliners shall have an obvious place for course workers to quickly attach a tow strap for emergency towing of the streamliner off the racecourse.

7.H.22 Chain/Belt Guard:

Guards are required to prevent a failed chain or belt from damaging fuel, oil, coolant or hydraulic lines.

7.I SIDECAR – SC, TRIKE T

A sidecar is a three-wheel vehicle leaving two tracks with only the rear wheels driving. The distance between the tracks left by the centrelines of the rear wheel and the sidecar wheel must be at least 800 mm and not more than 1350mm. If three tracks are made, the distance between the tracks of the rear wheel and the front wheel must not be more than 100 mm apart.

A TRIKE – T is a three wheeled vehicle leaving three-wheel tracks**.**

7.I.1 Passenger:

Passenger(s) are not allowed in or on the sidecar. Loading of sidecar wheel shall be sufficient to assure stability. Properly secured weight or ballast may be used.

7.I.2 Engine Location:

The engine/engines shall be located between the front and rear drive wheel.

7.I.3 Driver Location:

The rider shall operate the sidecar outfit with motorcycle type handlebars from a position which places his centerline between the front and rear drive treads. The rider must be visible from the hips to the shoulders from the side view and be able to exit the outfit without restriction, unless in compliance with enclosed streamliner rules.

7.I.4 Chassis and Suspension:

The outfit's chassis and suspension may be of conventional solo motorcycle configuration utilizing attached sidecar chassis and body/platform panels. Special construction chassis with integral or attached sidecars are permitted and encouraged. All wheel suspension is encouraged.

7.I.5 Steering:

Telescopic fork, leading or trailing link or center hub or spindle steering/suspension system may be used. Only the front wheel may be used for steering. All systems shall incorporate a steering damper. Torsion Cable steering systems are not permitted.

7.I.6 Sidecar:

The sidecar unit may be located on either the left or right side. All universal type mounting brackets and rigid bar fittings shall have adequate depth of engagement, rigidity, and security. All attaching fasteners shall be safety wired or otherwise secured by visually verifiable means. Multiple rigid bars may be necessary to ensure rigidity. Universal mounts deemed inadequate for competition shall be replaced with purpose-built components approved by the competition committee. Special Construction outfits with integral or attached sidecars

will be evaluated for adequate dispersal of sidecar-induced stresses.

7.I.7 Wheelbase and Track:

Track shall be no less than 81.28 cm (32 in.) and wheelbase between 127 cm (50 in) and 279.4 cm (110 in.). No wheelbase restriction on streamliners.

7.I.8 Wheel Size:

The front and rear wheel rim shall be no less than 25.4 cm (10 in.) nominal diameter. The sidecar wheel rim may be no less than 12.7 cm (5 in.) nominal diameter. No size restriction on streamliners.

7.I.9 Tires:

The speed rating requirements for solo machines apply, see Section 7. B.8.

7.I.10 Chain Guard and Wheel Cover:

See Section 7.B.22 Chain Guard requirements. The inside of the sidecar wheel shall have a cover.

7.I.11 Passenger Accommodation:

A passenger is not allowed to ride in or on the sidecar. Sidecar platform shall be able to accommodate a forward-facing, kneeling passenger with a size and weight of 170.18 cm (5 ft. 7 in.), 77.11 kg (170 lbs.) The platform shall encompass a rectangular shape having a minimum dimension of 30.48 cm (12 in.) by 81.28 cm (32 in.). The 30.48 cm (12 in.) dimension shall be oriented perpendicular (90 deg.) to the wheelbase of the motorcycle. The 81.28 cm (32 in.) dimension shall be oriented parallel to the wheelbase.

7.I.11.A. Sidecar Wheel Loading:

Loading of sidecar wheel must be sufficient to assure stability. Properly secured weight or ballast may be used. A minimum of 10% of the rig weight is required to be on the sidecar wheel.

7.I.12 Sidecar Streamliner - SCS

This is the ultimate sidecar land speed vehicle. Innovation in design is encouraged. Shall meet all sidecar requirements and two-wheel streamliner requirements, except Section 7. H.19. Passenger accommodations and track requirements shall conform to Sections 7. I.7 and 7. I.11. No wheelbase restriction for streamliners. All sidecars not meeting the unrestricted driver exit requirement in Section 7.I.3 shall run in this class.

7.I.13 Test Runs:

Vehicle stability and sidecar driver licensing evaluations will be conducted at speed increments specified in Section 1.M Driver Licensing until maximum speed is attained. Adjustment of sidecar ballast and/or wheel alignment may be required.

7.I.A.1 Trike. Or other three wheeled motorcycle

A trike is a three wheeled vehicle with either two wheels at the front and one at the rear or two wheels at the rear and one at the front controlled with motorcycle handlebars. Trikes will comply with all motorcycle safety rules

7.I.A.2 – Production Trike

A production trike can be any three wheeled motorcycle using motorcycle handlebars that otherwise complies with the motorcycle production rules See rule 7.F.

7.I.A.3 - Engine Location:

The engine/engines shall be located between the front and rear wheels, and the engine must be located on the longitudinal centreline of the Trike.

7.I.A.4 – Driver/Rider Location:

The rider shall operate the Trike with motorcycle type handlebars from a position on the longitudinal centreline between the front and rear wheels.
No streamlining is permitted in the Trike Class 7.I.A.1 (does not apply to 7.I.A.1 Trike Streamliner Class). Streamlining is defined as any devices or objects forward or behind the rider (see 7.A.7) that have the apparent effect of directing, limiting, or controlling airflow around the motorcycle or the rider.
It shall be possible to see all of the rider from either side. As viewed directly from above, it shall be possible to see all of the rider, in any and all riding positions except for the legs and feet (this does not apply to Production Trike Classes).
The rider must be able to exit the Trike without restriction, unless in compliance with enclosed streamliner rules.

7.I.A.5 – Chassis and suspension

The trikes chassis and suspension may be of conventional solo motorcycle configuration utilizing attached trike chassis. Special construction chassis are permitted and encouraged. All wheel suspension is encouraged.

7.I.A.6 – Steering

Telescopic forks, leading or trailing link or centre hub or spindle steering/suspension system may be used. Only the front wheels may be used for steering. All systems shall incorporate a

steering damper. Torsion cable steering systems are not permitted.

7.I.A.7 - Wheelbase and Track:

Track shall be no less than 600mm. The wheelbase can be between 1500mm and 4000mm.
The two wheels must be located at an equal distance either side of the longitudinal centre track of the Trike.
No wheelbase restriction applies to Streamliners.

7.I.A.8 Wheel Size:

The front and rear wheel rims shall be no less than 38.1 cm (15 in.) nominal diameter unless OEM production

7.I.A.9 Tires:

The speed rating requirements for solo machines apply, see Section 7.B.8.

7.I.A.10 Chain Guard:

See Section 7.B.22 Chain Guard requirements.

7.I.A.11 Front and Rear Fenders

See Front Fender see Section 7.F.4.1 Rear Fender see section 7.F.4.2.

7.I.A.12 Trike Streamliner - TS

Innovation in design is encouraged. Shall meet all four wheeled streamliner requirements. No maximum wheelbase restriction for streamliners.

7.I.A.13 Engine classes and capacities

Engine classes and capacities are the same as motorcycle special construction classes, see 7J

7.J ENGINE CLASSES

7.J.1 Production - P:

Production engines shall be the same model as the model of the frame being used and shall have STOCK EXTERNAL APPEARANCE. Production motorcycles shall use OEM cylinders, heads and crankcases to comply with this class. OEM engine displacement determines the displacement class for competition. Displacement may not be increased beyond that class limit. Starting mechanism shall be retained and operable. Carburetors or throttle bodies shall be OEM for that model production engine. All production engines run in gas class. See Section 7.D.3 unless using an omega engine.

7.J.2 Production Push Rod P-PP:

Same as Production but shall have pushrod operated valves with camshaft located at least one crankshaft stroke below the OEM cylinder deck position or utilize OEM pushrod length at least twice the crankshaft stroke.

7.J.3 Production Supercharged - PB:

Same as Production, but an original brand factory installed turbocharger or supercharger is required.

7.J.3.1 Class Production Push Rod Supercharged - PPB:

Same as Production P but shall have pushrod operated valves with camshaft located at least one crankshaft stroke below the OEM cylinder deck position or utilize OEM push rod length at

least twice the crankshaft stroke and an original brand factory-installed turbocharger or supercharger is required.

7.J.4 Production Vintage – P-PV:

Same as Production but shall have been produced prior to 1956.

7.J.5 Class Fuel - F:

Shall be comprised of major parts and components designed primarily for use in motorcycle engines. No restrictions on fuel. Superchargers or turbochargers are not permitted. Fuel injection is permitted. With the exception of Special Construction, Streamliner, Special construction Sidecar, and Special construction Trike which may run any Otto, two cycle, rotary or diesel engine. All vehicles entered in motorcycle classes shall be wheel driven.

7.J.6 Class Gas - G:

Same as Class F, except it is limited to event gasoline or an approved gasoline, see Section 2.B .

7.J.7 Class Blown Fuel - BF:

Same as Class F, except supercharger or turbocharger is required and shall be mechanically or exhaust gas driven and shall pressurize the intake system above atmospheric pressure. No restrictions on fuel.

7.J.8 Class Blown Gas - BG:

Same as Class BF, except it is limited to event gasoline. See section 2.B. Water injection is allowed, but water tanks shall be inspected and sealed prior to each record run.

7.J.9 Class Push Rod Gas - PG and Push Rod Fuel - PF:

Any motorcycle engine with push rod operated valves. The camshaft shall be located at least one crankshaft stroke below the OEM cylinder deck position or that utilize OEM pushrod length at least twice the crankshaft stroke.
Replacement heads shall have the same number of valves as originally produced as a production engine. “G” designates a gasoline engine and “F” a fuel engine.

7.J.10 Class Vintage Gas - VG and Vintage Fuel - VF:

Same as Class G or F, except that the class is limited to motorcycle engines produced prior to 1956**.**
For reasons of historical authenticity, vintage engine modifications are restricted to older technology levels as far as practical. Accordingly, in classes VF, VG, VBF and VBG newer technologies **specifically** EFI, or electronic reactive ignition systems are not in keeping with the spirit of the Vintage classes and are not allowed. Computers are allowed for data collection purposes only**.**
Engines shall utilize OEM crankcase, OEM cylinders on flatheads and two strokes and OEM heads on OHV engines. Above components made after 1955 and exact reproductions may be considered legal in Vintage classes if they offer no competitive advantage. Pre-installation approval by the contest board is required. It is the entrant’s responsibility to provide documentation and samples. A 1.27 mm (.050 in.) overbore is allowed on vintage engines only (including production vintage) only if the OEM bore diameter is within 1.27 mm (.050 in.) of maximum class displacement and will be discounted when the bore size is measured.

Flathead engine displacement will be discounted 33 1/3% in determining engine displacement class limits. For example, a 1500cc measured displacement would run as a 1000cc.

7.J.10.1 Class Vintage Blown Fuel - VBF and Vintage Blown Gas - VBG:

Same as class VF or VG, except that a supercharger is required and shall be mechanically or exhaust gas driven and shall pressurize the intake system above atmospheric pressure.

7.J.11 Class Push Rod Blown Gas - PBG and Push Rod Blown Fuel - PBF:

Same as Section 7.J.9 above, push rod classes, except that a supercharger or turbocharger is required; **see Section 7.B.13, and** subject to the same limitations as Classes BF and BG, respectively.

7.J.12 Class Unlimited Fuel – UF and Unlimited Gas - UG:

Any reciprocating **non-motorcycle** engine which uses the Otto cycle may run in Streamliner, *A, APS, Trike categories only*.

7.J.13 Class Ω (Omega):

An engine using a thermodynamic cycle other than Otto, Two Cycle or Diesel. Although electric motors are not a Thermodynamic Cycle they are allowed in this class. This class includes electric, steam and turbine engines. Entry shall comply with all applicable frame class requirements. Entrant shall submit complete power plant details to the technical committee for safety evaluation at least 45 days prior to the meet in writing in accordance with the RULE DEVIATION procedure, Section 1.R.

7J.14 Classic Engine C

Classic Engine is a class for all Air Cooled, Non-Pushrod Engines using Carburetors made between 1st Jan 1956 and the 31st December 1986. The entrant is required to provide suitable documentation substantiating the date of manufacture of the entry if directed to by the Chief Motorcycle Inspector.

A bike entered in the Classic Engine Classes cannot be entered in any other Engine Classes within the same racing season.

Pushrod Class Engines are not allowed in Classic Engine Class

An Air-Cooled engine is defined as any engine that relies solely on heat sinking fins that are part of the cylinder and cylinder head for engine cooling.

No Water, Liquid or Oil Cooled Engines are allowed.

Oil Coolers are only allowed for the Engine/Transmission Oil that lubricates the internals of the engine.

Extra Fins can be added and/or the area of the Fins enlarged to enhance cooling except on a Classic Production Class Engine.

All Classic Class Engines must use Carburetors for the Induction.

Any number or size of Carburetors can be used except in Production Classic Class.

No type of Fuel Injection is allowed on any Classic Engine.

Any form of Ignition System is allowed except in Production Classic.

All other relevant existing Safety, Technical and Class requirements must be met.

Class designation is identified by the addition of the letter C in front of the Engine Category Designation: see section 7.D.2

7.J.14 A Production Classic: CP

Same as 7.J.1 Production and made between 1st Jan 1956 and the 31st December 1986 using an Air Cooled, Non-Pushrod Engine with Carburetors.

7.J.14 B Class CF:

Same as Class F. Shall be comprised of major parts and components designed primarily for use in motorcycle engines made between 1st Jan 1956 and the 31st December 1986 using an Air Cooled, Non-Pushrod Engine with Carburetors. No restrictions on fuel. Superchargers or turbochargers are not permitted.

7.J.14 C Class CG:

Same as Class CF, except it is limited to event gasoline.

7.J.14 D Class CBF:

Same as Class CF, except supercharger or turbocharger is required and shall be mechanically or exhaust gas driven and shall pressurize the intake system above atmospheric pressure using a Draw or Blow Through Carburetor induction system. No restrictions on fuel.

7.J14 E Class CBG:

Same as Class BF, except it is limited to event gasoline. See section 2.B. Water injection is allowed, but water tanks shall be inspected and sealed prior to each record run.

SECTION 8 DLRA MOTORCYCLE RECORDS

Classes with no listed record are considered as open.

50 Cubic Centimeters (Approx. 3 Cubic Inches)				
50 Production				
Class	**Entry Name**	**Rider**	**Year**	**Speed**
50 P-PP		Paul Broughan	2004	36.255
50 Modified				
Class	**Entry Name**	**Rider**	**Year**	**Speed**
50 M-G		Don Short	2018 (2017, 2014)	73.386 (65.393, 39.528)
50 M-CG		Katherine Goulter	2018	66.790
50 Modified Partial Streamlining				
Class	**Entry Name**	**Rider**	**Year**	**Speed**
50 MPS-F		Joanne Fysh	2019	57.501
50 Special Construction				
Class	**Entry**	**Rider**	**Year**	**Speed**

	Name			
50 A-G		Don Short	2019	82.566
50 Special Construction Partial Streamlining				
Class	**Entry Name**	**Rider**	**Year**	**Speed**
50 APS				
50 Sidecar				
Class	**Entry Name**	**Rider**	**Year**	**Speed**
50 SC-F		Jean-Paul Afflick	2019	67.201
50 Sidecar Streamliner				
Class	**Entry Name**	**Rider**	**Year**	**Speed**
50 SCS				
50 Streamliner				
Class	**Entry Name**	**Rider**	**Year**	**Speed**
50 S				

100 Cubic Centimeters (Approx. 6.1 Cubic Inches)

100 Production				
Class	**Entry Name**	**Rider**	**Year**	**Speed**
100 P-P		Karl Pegg	2005	67.765
100 Modified				
Class	**Entry Name**	**Rider**	**Year**	**Speed**
100 M-G		Keely Pritchett	2018 (2014)	70.861 (54.023)
100 Modified Partial Streamlining				
Class	**Entry Name**	**Rider**	**Year**	**Speed**
100 MPS-G		Kristian Sudino	2017	82.816
100 Special Construction				
Class	**Entry Name**	**Rider**	**Year**	**Speed**
100 A-G		Tim Lewis	2017	91.215
100 A-CG		James Goulter	2018	79.121
100 A-BF		Mitchell Afflick	2017 (2015, 2014)	108.483 (106.690, 93.884)
100 Special Construction Partial Streamlining				
Class	**Entry Name**	**Rider**	**Year**	**Speed**

100 APS-G		Lachlan Tucker-Powditch	2015 (2013)	91.700 (89.706)
100 APS-CG		James Goulter	2018	86.915
100 APS-F		Alex McLachlan	2014	99.431
100 APS-BF		Warren Afflick	2018 (2017, 2016, 2015, 2014)	121.151 (116.238, 113.579, 109.589, 94.583)
100 Sidecar				
Class	**Entry Name**	**Rider**	**Year**	**Speed**
100 SC				
100 Sidecar Streamliner				
Class	**Entry Name**	**Rider**	**Year**	**Speed**
100 SCS				
100 Streamliner				
Class	**Entry Name**	**Rider**	**Year**	**Speed**
100 S				
125 Cubic Centimeters (Approx. 7.6 Cubic Inches)				
Production 125				
Class	**Entry Name**	**Rider**	**Year**	**Speed**

125 P-P		Lachlan Tucker-Powditch	2017 (2016, 2015)	107.443 (96.504, 74.940)
125 Modified				
Class	**Entry Name**	**Rider**	**Year**	**Speed**
125 M-G		Peter Cvejic	2015 (2014, 2013, 2009)	100.290 (78.833, 74.388, 60.216)
125 M-PG		Susan Brander	2018 (2006)	90.072 (77.666)
125 M-F		Sherie Traeger	2018 (2016, 2015)	83.372 (74.225, 64.712)
125 Modified Partial Streamlining				
Class	**Entry Name**	**Rider**	**Year**	**Speed**
125 MPS-G		Ian Robinson	2017 (2016, 2015)	108.538 (106.207, 101.283)
125 MPS-PG		Adrian Lovelace	2018	91.102
125 MPS-F		Drew Hender	2018	77.253
125 Special Construction				
Class	**Entry Name**	**Rider**	**Year**	**Speed**
125 A-G		Milton Lewis		100.502
125 A-BG		David Plecas	2017	103.235
125 A-F		Richard Smithies	2017 (2016)	76.739 (71.431)

125 A-BF		David Plecas	2018 (2014)	117.096 (111.476)
125 Special Construction Partial Streamlining				
Class	**Entry Name**	**Rider**	**Year**	**Speed**
125 APS-G		Dave McLachlan	2009	125.086
125 APS-F		Michael Riddell	2015	128.533
125 Sidecar				
Class	**Entry Name**	**Rider**	**Year**	**Speed**
125 SC-G		Paul Cox	2019	68.717
125 SC-PG		Ben Needham	2018	78.947
125 Sidecar Streamliner				
Class	**Entry Name**	**Rider**	**Year**	**Speed**
125 SCS				
125 Streamliner				
Class	**Entry Name**	**Rider**	**Year**	**Speed**
125 S				

175 Cubic Centimeters (Approx. 10.6 Cubic Inches)

175 Production				
Class	**Entry Name**	**Rider**	**Year**	**Speed**

175 P-P		Paul Macleod	2015 (2013)	108.250 (90.269)
175 Modified				
Class	**Entry Name**	**Rider**	**Year**	**Speed**
175 M-G		Paul Macleod	2016 (2013, 2010)	111.261 (89.503, 77.881)
175 M-PG		Peter Biddiss	2016	82.271
175 M-VG		Bill Brice	2006	63.649
175 M-F		Paul Macleod	2016 (2010, 2006)	108.183 (84.094, 71.574)
175 Modified Partial Streamlining				
Class	**Entry Name**	**Rider**	**Year**	**Speed**
175 MPS-G		Paul Macleod	2015 (2013)	115.233 (97.834)
175 MPS-PG		Peter Biddiss	2019	76.573
175 MPS-F		Paul Macleod	2017	113.165
175 Special Construction				
Class	**Entry Name**	**Rider**	**Year**	**Speed**
175 A-F		Paul MacLeod	2019 (2010)	106.718 (87.472)
175 A-G		Paul MacLeod	2019	94.970
175 Special Construction Partial Streamlining				

Class	Entry Name	Rider	Year	Speed
175 APS				
175 Sidecar				
Class	**Entry Name**	**Rider**	**Year**	**Speed**
175 SC				
175 Sidecar Streamliner				
Class	**Entry Name**	**Rider**	**Year**	**Speed**
175 SCS				
175 Streamliner				
Class	**Entry Name**	**Rider**	**Year**	**Speed**
175 S				
250 Cubic Centimeters (Approx. 15.2 Cubic Inches)				
250 Production				
Class	**Entry Name**	**Rider**	**Year**	**Speed**
250 P-P		Scott Noonan	2015 (2010, 1990)	133.606 (106.951, 78.08)
250 P-PC		Steve McGrath	2019	70.462
250 Modified				
Class	**Entry Name**	**Rider**	**Year**	**Speed**
250 M-G		Peter Healy	2016 (2010)	121.147 (99.042)

250 M-VG		Paul Wilkins	2016 (2015)	77.491 (63.009)
250 M-F		Randall Anderson	2017	79.731
250 Modified Partial Streamlining				
Class	**Entry Name**	**Rider**	**Year**	**Speed**
250 MPS-G		David Bolger	2014 (2013, 2009,2006)	140.46 (131.210, 121.885, 106.521)
250 MPS-VG		Paul Wilkins	2018	84.618
250 MPS-F		David Bolger	2018 (2016, 2006)	127.914 (114.173, 109.117)
250 Special Construction				
Class	**Entry Name**	**Rider**	**Year**	**Speed**
250 A-G		Tom Lang	2010 (2009)	88.530 (74.318)
250 A-F		Peter Healy	2018 (2017)	103.591 (92.175)
250 A-BF		Robert Wilson	2018	107.041
250 Special Construction Partial Streamlining				
Class	**Entry Name**	**Rider**	**Year**	**Speed**
250 APS-G		Peter Healy	2015 (2014, 2013)	121.694 (118.561, 113.751)
250 APS-PG		James Pickett	2019	81.260

250 Sidecar				
Class	**Entry Name**	**Rider**	**Year**	**Speed**
250 SC-G		Paul Wilkins	2019	64.557
250 Sidecar Streamliner				
Class	**Entry Name**	**Rider**	**Year**	**Speed**
250 SCS				
250 Streamliner				
Class	**Entry Name**	**Rider**	**Year**	**Speed**
250 S				

350 Cubic Centimeters (Approx. 21.3 Cubic Inches)

350 Production				
Class	**Entry Name**	**Rider**	**Year**	**Speed**
350 P-P		Terry Allinson	2015 (2014)	119.136 (84.211)
350 P-PV		Neil Bromley	2015 (2013)	88.650 (61.822)
350 Modified				
Class	**Entry Name**	**Rider**	**Year**	**Speed**
350 M-G		Evelyne Scholz	2005	120.417
350 M-PG		Peter Mounsey	2019	90.129

350 M-VG		Hugo Halls	2013	83.424
350 Modified Partial Streamlining				
Class	**Entry Name**	**Rider**	**Year**	**Speed**
350 MPS-G		Dave McLachlan	2005	129.533
350 MPS-F		Jean-Paul Afflick	2016	114.968
350 MPS-VF		Peter Vanstitart	2000	132.547
350 Special Construction				
Class	**Entry Name**	**Rider**	**Year**	**Speed**
350 A-G		Nigel Petrie	2015	117.935
350 Special Construction Partial Streamlining				
Class	**Entry Name**	**Rider**	**Year**	**Speed**
350 APS-VG		Fred Holland	2016 (2015, 2009)	89.423 (83.205, 77.532)
350 APS-F		John Murray	2018 (2017)	127.605 (113.823)
350 Sidecar				
Class	**Entry Name**	**Rider**	**Year**	**Speed**
350 SC				

350 Sidecar Streamliner				
Class	**Entry Name**	**Rider**	**Year**	**Speed**
350 SCS				

350 Streamliner				
Class	**Entry Name**	**Rider**	**Year**	**Speed**
350 S				

500 Cubic Centimeters (Approx. 30.5 Cubic Inches)

500 Production				
Class	**Entry Name**	**Rider**	**Year**	**Speed**
500 P-P		John Feaver	2013	123.174
500 P-PPB		Steve Kell	2015	129.233
500 P-PV		Les Toohey	2017	100.976
500 P-PC		Angus Parish	2019	111.261

500 Modified				
Class	**Entry Name**	**Rider**	**Year**	**Speed**
500 M-G		Gary Brumby	2019 (2016, 2014)	128.091 (121.782, 98.444)
500 M-PG		Paul Di Lizio	2018 (2013, 2010)	115.592 (114.025, 107.168)
500 M-VG		Bill Brice	2006 (2005)	106.002 (63.073)

500 M-F		Brian Fullard	2016 (2015)	121.237 (111.666)
500 M-BF		Ken Robinson	2019	142.407
500 M-VF		Bill Brice	2005	112.923
500 M-CG		Marcus Thompson	2018	126.582
500 Modified Partial Streamlining				
Class	**Entry Name**	**Rider**	**Year**	**Speed**
500 MPS-G		Peter Turner	2010 (2009)	133.451 (124.739)
500 MPS-F		Mark Youman	2017(2014, 2013, 2010)	128.608 (126.627, 125.357, 114.722)
500 MPS-BF		John Ladbrook	2018 (2017, 2005)	147.880 (135.237, 132.960)
500 Special Construction				
Class	**Entry Name**	**Rider**	**Year**	**Speed**
500 A-PG		Peter Curran	2017	117.264
500 A-F		Phil Arnold	2000 (1999)	128.472 (103.397)
500 A-PBF		Murdoch Gilbert	2018	61.224
500 Special Construction Partial Streamlining				

Class	Entry Name	Rider	Year	Speed
500 APS-G		Dave McLachlan	2013	128.023
500 APS-VG		Ron Davis	2016	101.446
500 APS-VF		John Feaver	2017	112.006
500 APS-PBF		Murdoch Gilbert	2019	91.614
500 APS-BF		Ken Robinson	2018	145.584
500 Sidecar				
Class	**Entry Name**	**Rider**	**Year**	**Speed**
500 SC-G		Gordon Nunn	2018	106.232
500 SC-F		Gordon Nunn	2017 (2010)	97.582 (80.493)
500 Sidecar Streamliner				
Class	**Entry Name**	**Rider**	**Year**	**Speed**
500 SCS				
500 Streamliner				
Class	**Entry Name**	**Rider**	**Year**	**Speed**
500 S				

650 Cubic Centimeters (Approx. 39.6 Cubic Inches)

650 Production

Class	Entry Name	Rider	Year	Speed
650 P-P		Lachlan Tucker Powditch	2018 (2000)	169.109 (168.843)

650 Modified

Class	Entry Name	Rider	Year	Speed
650 M-G		Paul Marcos	2017 (2016, 2015)	144.788 (103.561, 102.749)
650 M-PG		Douglas Keith	2014	116.017
650 M-VG		John Moss	2015 (2014, 2003)	119.002 (110.667, 100.741)
650 M-F		Nat Gagan	2016	119.961
650 M-VF		Geoff Spurway	2004	126.408
650 M-CG		Tony Brearley	2019	115.305

650 Modified Partial Streamlining

Class	Entry Name	Rider	Year	Speed
650 MPS-G		Lachlan Tucker Powditch	2018 (2010)	171.217 (161.812)

650 MPS-PG		Corinna Steeb	2019 (2018, 2017)	110.604 (104.481, 103.341)
650 MPS-BG		Wayne Mitchell	2009	169.523
650 MPS-F		Matt Clifford	2015	161.950
650 MPS-VF		Peter Vanstitart	2001	109.157
650 Special Construction				
Class	**Entry Name**	**Rider**	**Year**	**Speed**
650 A-VF		Peter Vansittart	2016	130.243
650 Special Construction Partial Streamlining				
Class	**Entry Name**	**Rider**	**Year**	**Speed**
650 APS-G		Mitch Yeats	2017 (2015)	165.441 (130.592, 75.917)
650 APS-F		Martin Powditch	2018 (2016)	141.176 (137.988)
650 APS-PF		Martin Gratton	2017	88.002
650 APS-PBF		Stuart Hooper	2016 (2015, 2014, 2013)	193.061 (183.702, 183.374, 171.600)
650 Sidecar				
Class	**Entry Name**	**Rider**	**Year**	**Speed**

650 SC-G		Paul Marcos	2014	105.507
650 Sidecar Streamliner				
Class	**Entry Name**	**Rider**	**Year**	**Speed**
650 SCS				
650 Streamliner				
Class	**Entry Name**	**Rider**	**Year**	**Speed**
650 S				

750 Cubic Centimeters (Approx. 45.7 Cubic Inches)

750 Production				
Class	**Entry Name**	**Rider**	**Year**	**Speed**
750 P-P		Paul Powditch	2019 (2013, 2010, 1994)	176.694 (172.340, 167.566, 144.34)
750 Modified				
Class	**Entry Name**	**Rider**	**Year**	**Speed**
750 M-G		Bob Prior	2016 (2002 2001)	163.368 (149.377, 136.330)
750 M-PG		Steve Kell	2015 (2013)	130.589 (121.074)
750 M-VG		Malcolm Brice	2015 (2013)	109.509 (72.407)
750 M-BG		Greg Butler	2000	102.913
750 M-F		Bob Prior	2018 (2016, 2013)	164.775 (162.345, 149.229)

750 M-PF		Steve Kell	2018	128.884
750 M-BF		Greg Watters	2016	213.018
750 Modified Partial Streamlining				
Class	**Entry Name**	**Rider**	**Year**	**Speed**
750 MPS-G		Shane Gaghan	2010 (2005)	187.373 (155.925)
750 MPS-PG		Martin Hobson	2016 (2015)	128.058 (125.400)
750 MPS-BG		Shane Gaghan	2016 (2013, 2009)	177.550 (143.815)
750 MPS-F		Chad Coombe	2013	179.051 (177.261)
750 MPS-PF		Andre Deubel	2019 (2009)	134.195 (131.406)
750 MPS-BF		Kim Krebs	2019 (2016, 2013)	213. 239 (212.678, 170.173)
750 Special Construction				
Class	**Entry Name**	**Rider**	**Year**	**Speed**
750 A-G		Martin Natrass	2018 (2014)	122.449 (103.167)
750 A-F		Russell Lowe	2018 (2014)	155.952 (103.929)
750 A-CG		Nick McGinn	2019 (2018)	122.628 (116.573)
750 Special Construction Partial Streamlining				

Class	Entry Name	Rider	Year	Speed
750 APS-G		Stephen Finn	2017 (2015, 2010)	163.310 (131.878, 127.325)
750 APS-PG		Phillip Eggleston	2013	134.620
750 APS-BG		Shane Gaghan	2015	188.957
750 APS-F		Martin Powditch	2017	137.216
750 APS-PF		Stuart Hooper	2010	139.001
750 APS-BF		Kim Krebs	2010	188.412
750 Sidecar				
Class	**Entry Name**	**Rider**	**Year**	**Speed**
750 SC				
750 Sidecar Streamliner				
Class	**Entry Name**	**Rider**	**Year**	**Speed**
750 SCS				
750 Streamliner				
Class	**Entry Name**	**Rider**	**Year**	**Speed**
750 S				
1000 Cubic Centimeters (Approx. 61 Cubic Inches)				
1000 Production				

Class	Entry Name	Rider	Year	Speed
1000 P-P		Mike Adi	2018 (2017, 2013, 2010, 2009,1994)	201.986 (199.115,185.682, 180.922, 180.469, 142.48)
1000 P-PP		Phil Arnold	2010	139.794
1000 Modified				
Class	**Entry Name**	**Rider**	**Year**	**Speed**
1000 M-G		Richard Pudney	2018 (2015, 2013, 2003)	183.917 (175.481, 172.340, 138.370)
1000 M-PG		Adrian Braun	2018 (2014, 2010)	145.255 (144.000, 136.074)
1000 M-VG		Mark Tuffley	2016	93.426
1000 M-BG		Andrew Rogers	2005	114.434
1000 M-F	Salted Nuts Racing	David Moore	2015	183.852
1000 M-PF		Mark Daley	2013	101.243
1000 Modified Partial Streamlining				
Class	**Entry Name**	**Rider**	**Year**	**Speed**
1000 MPS-G		Craig Delforce	2016 (2015, 2013, 2006, 2002)	201.975 (192.364, 188.442, 177.988, 170.261)

1000 MPS-PG		Josh Schuit	2018 (2015, 2014, 2013)	154.400 (154.228, 148.191, 146.389)
1000 MPS-BG		Andy Freeman	2018 (2017)	212.867 (202.943)
1000 MPS-F		Mike Adi	2018 (2016, 2015, 2014, 2006)	200.145 (194.384, 190.739, 186.210, 164.024)
1000 MPS-BF		Craig Goldsworthy	2018 (2017 , 2016, 2006)	208.430 (206.339, 200.725, 174.536)
1000 Special Construction				
Class	**Entry Name**	**Rider**	**Year**	**Speed**
1000 A-G		Sy Nunan	2016	141.194
1000 A-PG		Josh Schuitt	2015 (2014)	143.937 (133.879)
1000 A-PF		Josh Schuitt	2016 (2015)	150.855 (88.522)
1000 A-BF		Jim Higgins	2017 (2009)	201.432 (143.609)
1000 A-VBF		Stuart Penn	2013 (2005)	120.551 (112.542)
1000 Special Construction Partial Streamlining				
Class	**Entry Name**	**Rider**	**Year**	**Speed**
1000 APS-G		Russell Lowe	2017(2010, 2009, 2002)	195.101 (164.323, 161.892, 153.181)

1000 APS-PG		Michael Panayi	2019 (2014)	132.488 (126.645)
1000 APS-BG		Dave McLachlan	2010	145.240
1000 APS-F		Brett DeStoop	2013 (2010, 2009)	240.192 (232.108, 210.169)
1000 APS-PF		Phil Eggleston	2015	137.910
1000 APS-BF		Andrew Maslen	2013	215.763
1000 APS-VBF		Stuart Penn	2016	80.208
1000 Sidecar				
Class	**Entry Name**	**Rider**	**Year**	**Speed**
1000 SC-G		Sean Kelly	2013 (2005)	140.603 (121.967)
1000 Sidecar Streamliner				
Class	**Entry Name**	**Rider**	**Year**	**Speed**
1000 SCS				
1000 Streamliner				
Class	**Entry Name**	**Rider**	**Year**	**Speed**

1000 S-G		Lucky Keiser	2009	136.467
1000 S-BF		John Vevers	1991	95.89

1350 Cubic Centimeters (Approx. 82.3 Cubic Inches)

1350 Production

Class	Entry Name	Rider	Year	Speed
1350 P-P		Grant Schlein	2015 (2010, 2005, 2004, 2002, 2000)	209.839 (203.504, 198.347, 196.420, 189.953, 172.993)
1350 P-PP		Paul Rogers	2005 (2004)	140.292 (125.243)
1350 P-PB		Brendon Collier	1999	130.942

1350 Modified

Class	Entry Name	Rider	Year	Speed
1350 M-G		Chris Bryson	2015 (2014, 2013, 2009,2004)	202.714 (194.774, 181.114, 161.059, 146.160)
1350 M-PG		Mal Hewett	2010 (2001, 2000)	153.714 (133.769, 116.731)
1350 M-VG		Mal Hewett	2009 (2002, 2001,2000)	151.375 (140.296, 129.124, 121.285)
1350 M-BG		Herb Wuersch	2014 (2013, 2000)	161.900 (151.165, 126.778)
1350 M-PBG		Alan Blackwood	2010 (2001, 1999)	167.504 (164.891, 150.200)

1350 M-F		Ronnie Stayt	2013 (2005)	198.446 (143.266)
1350 M-PF		Mark Topp	2018	138.654
1350 M-VF		Peter Arundel	2002	158.73
1350 M-BF		Ron Stayt	2018 (2004)	166.728 (159.602)
1350 M-CG		Steven Tatt	2019	91.296
1350 Modified Partial Streamlining				
Class	**Entry Name**	**Rider**	**Year**	**Speed**
1350 MPS-G		Ken Robinson	2015 (2013, 2004, 2003,2000)	232.889 (218.433, 204.603, 192.250, 163.280)
1350 MPS-PG		Dave Tattingham	2000	163.280
1350 MPS-VG		Mal Hewett	2010	154.932
1350 MPS-BG		Greg Watters	2005 (2004)	223.325(173.845)
1350 MPS-F		Ken Robinson	2016 (2014, 2004)	216.489 (214.874, 202.065)
1350 MPS-PF		James Bragg	2018 (2017, 2010)	168.919 (164.301, 162.557)

1350 MPS-VF		Peter Birthisel	2018	157.425
1350 MPS-BF		John Noonan	2006	235.740
1350 MPS-CG		John Kirchner	2018	139.991
1350 Special Construction				
Class	**Entry Name**	**Rider**	**Year**	**Speed**
1350 A-G		Dave McLachlan	2015 (2013)	205.632 (187.656)
1350 A-PG		Mick Hite	2016 (2015, 2013, 2002)	154.639 (153.616, 152.737, 140.208)
1350 A-VG		Mal Hewett	2015	166.898
1350 A-F		Greg Watters	2016 (2013)	206.849 (198.292)
1350 A-PF		James Bragg	2016	160.678
1350 A-BF		Richard Assen	2018 (2017)	227.187 (208.792)
1350 Special Construction Partial Streamlining				
Class	**Entry Name**	**Rider**	**Year**	**Speed**
1350 APS-G		Ken Robinson	2017 (2013, 2009)	223.422 (215.750, 155.065)

1350 APS-PG		Mick Hite	2018 (2013)	174.825 (156.603)
1350 APS-VG		Mal Hewett	2016	185.347
1350 APS-BG		Greg Watters	2010	218.898
1350 APS-F		Grant Schlien	2016 (2015, 2013)	229.753 (221.206, 210.995)
1350 APS-PF		James Bragg	2015	180.587
1350 APS-BF		Troy Bodley	2013 (2010, 2005,2002)	212.477 (188.412, 163.206, 148.026)
1350 Sidecar				
Class	**Entry Name**	**Rider**	**Year**	**Speed**
1350 SC-G		Sean Kelly	2013	155.682
1350 SC-F		Max Hooper	2013	125.366
1350 Sidecar Streamliner				
Class	**Entry Name**	**Rider**	**Year**	**Speed**
1350 SCS-PF		Martin Gratton	2018	99.657

1350 Streamliner				
Class	**Entry Name**	**Rider**	**Year**	**Speed**
1350 S				

1650 Cubic Centimeters (Approx. 100.6 Cubic Inches)

1650 Production				
Class	**Entry Name**	**Rider**	**Year**	**Speed**
1650 P-P		Ralph Nicholls	2013	208.153
1650 P-PP		Colin Archibald	2019	122.568

1650 Modified				
Class	**Entry Name**	**Rider**	**Year**	**Speed**
1650 M-G		Sam Moses	2017 (2013)	189.873 (170.754)
1650 M-PG		Phil Cvirn	1996, (1995)	147.87 (132.60)
1650 M-BG		Jim Higgins	2013	192.154
1650 M-F		Jeff Lemon	2018	195.397
1650 M-PF		Phil Cvirn	2004, (1995)	152.775 (147.49)

1650 Modified Partial Streamlining				
Class	**Entry Name**	**Rider**	**Year**	**Speed**

1650 MPS-G		Gary Peterson	2005 (2003)	217.443 (175.750)
1650 MPS-PG		Phil Cvirn	2006	144.906
1650 MPS-F		Jeff Lemon	2017 (2016, 2014, 2003)	210.773 (198.610, 182.288, 168.350)
1650 MPS-PF		Phil Cvirn	2017 (2016, 2006)	158.423 (154.229 147.947)
1650 Special Construction				
Class	**Entry Name**	**Rider**	**Year**	**Speed**
1650 A-G		Evelyne Scholtz	2018	185.109
1650 A-BG		Steven Kell	2014	186.047
1650 A-F		Rod Bryson	2019	185.655
1650 A-PF		Brook Denning	2018 (2017)	100.312 (80.257)
1650 Special Construction Partial Streamlining				
Class	**Entry Name**	**Rider**	**Year**	**Speed**
1650 APS-G		Dave McLachlan	2018	203.023
1650 APS-BG		Greg Watters	2015 (2013)	209.035 (207.876)
1650 APS-F		Rod Bryson	2018	193.226

1650 APS-BF		Greg Watters	2019 (2015)	179.565 (164.647)
1650 Sidecar				
Class	**Entry Name**	**Rider**	**Year**	**Speed**
1650 SC				
1650 Sidecar Streamliner				
Class	**Entry Name**	**Rider**	**Year**	**Speed**
1650 SCS				
1650 Streamliner				
Class	**Entry Name**	**Rider**	**Year**	**Speed**
1650 S				
2000 Cubic Centimeters (Approx. 122 Cubic Inches)				
2000 Production				
Class	**Entry Name**	**Rider**	**Year**	**Speed**
2000 P-P		Ken Robinson	2015 (2002)	166.190 (120.353)
2000 P-PP		Tony Brearley	2016	148.671
2000 Modified				
Class	**Entry Name**	**Rider**	**Year**	**Speed**
2000 M-G		Rebecca Robinson	2017 (2016, 2015)	174.579 (169.651, 150.445)

2000 M-PG		Tony Brearley	2015 (2003)	153.224 (129.449)
2000 M-BG		Rebecca Robinson	2018	168.587
2000 M-PF		Elliot Andrews	2016 (2015)	155.885 (139.152)
2000 M-BF		Rebecca Robinson	2018	165.700
2000 Modified Partial Streamlining				
Class	**Entry Name**	**Rider**	**Year**	**Speed**
2000 MPS-PG		Corey Buttgieg	2016 (2015)	175.131 (165.131)
2000 MPS-BG		Neill Finlay	2013	197.477
2000 MPS-PF		Elliott Andrews	2018	161.031
2000 Special Construction				
Class	**Entry Name**	**Rider**	**Year**	**Speed**
2000 A-PG		Craig Houssenloge	2019 (2017)	141.585 (139.904)
2000 Special Construction Partial Streamlining				
Class	**Entry Name**	**Rider**	**Year**	**Speed**
2000 APS-PG		Craig Houssenloge	2019 (2018)	154.622 (143.084)
2000 Sidecar				

Class	Entry Name	Rider	Year	Speed
2000 SC				
2000 Sidecar Streamliner				
Class	**Entry Name**	**Rider**	**Year**	**Speed**
2000 SCS				
2000 Streamliner				
Class	**Entry Name**	**Rider**	**Year**	**Speed**
2000 S				
3000 Cubic Centimeters (Approx. 183 Cubic Inches)				
3000 Production				
Class	**Entry Name**	**Rider**	**Year**	**Speed**
3000 P-P		Mark Clifford	2019 (2017, 2015)	141.068 (126.971, 124.157)
3000 Modified				
Class	**Entry Name**	**Rider**	**Year**	**Speed**
3000 M-G		Nigel Mountford	2019 (2015)	147.488 (124.866)
3000 M-BG		Douglas Keith	2014	143.101
3000 M-PF		Marc Houssenloge	2016	146.822
3000 Modified Partial Streamlining				

Class	Entry Name	Rider	Year	Speed
3000 MPS				
3000 Special Construction				
Class	**Entry Name**	**Rider**	**Year**	**Speed**
3000 A-PG		Marc Hossenloge		153.557
3000 Special Construction Partial Streamlining				
Class	**Entry Name**	**Rider**	**Year**	**Speed**
3000 APS-G		Joe Hogan	2017	132.372
3000 APS-PG		Marc Houssenloge	2018	171.576
3000 APS-BG		Robert Bishop	2010 (2006)	154.426 (144.848)
3000 APS-PF		Corey Buttigieg	2018	180.941
3000 Sidecar				
Class	**Entry Name**	**Rider**	**Year**	**Speed**
3000 SC				
3000 Sidecar Streamliner				
Class	**Entry Name**	**Rider**	**Year**	**Speed**

3000 SCS				
3000 Streamliner				
Class	**Entry Name**	**Rider**	**Year**	**Speed**
3000 S-F		Rocky Robinson	2000	289.715
3000 S-BF		Valerie Thompson	2018	328.467
3000 Trike				
3000 T-BF		Dion Higgins	2019	167.220
UNLIMITED (3000+CC)				
Unlimited Special Construction				
Class	**Entry Name**	**Rider**	**Year**	**Speed**
UNLIMITED A				
Unlimited Special Construction Partial Streamlining				
Class	**Entry Name**	**Rider**	**Year**	**Speed**
UNLIMITED APS-G		Russell Lowe	2019	142.219
UNLIMITED APS-BG		Trent Clare	2009 (2006, 2005)	144.601 (143.626, 141.978)
Unlimited Sidecar				

Class	Entry Name	Rider	Year	Speed
UNLIMITED SC				
Unlimited Sidecar Streamliner				
Class	**Entry Name**	**Rider**	**Year**	**Speed**
UNLIMITED SCS				
Unlimited Streamliner				
Class	**Entry Name**	**Rider**	**Year**	**Speed**
UNLIMITED S-G		Lyndon Cooper	2000	204.528
UNLIMITED S/UG		Lyndon Cooper	2002	187.754
UNLIMITED S-BG		Lyndon Cooper	1999	146.962
Omega				
Class	**Entry Name**	**Rider**	**Year**	**Speed**
OMEGA-APS-O		Martin Gratton	2019	102.847
OMEGA-SCS-O		Eva Hakansson	2019	216.199
OMEGA-M		Craig Windsor	2010	93.6
OMEGA-MPS		Kearon de Clouet	2010	110.592

Retired Records (no longer used or available)				
Class	**Comment**	**Rider**	**Year**	**Speed**
P-PG 125	class deleted 2013 rule book	Paul Bushell	2006	68.006
P-G 350	class deleted 2013 rule book	Phillip Ryan	2005	103.507
P-G 500	class deleted 2013 rule book	Nigel Begg	2006	110.846
P-PG 650	class deleted 2013 rule book	Don Shields	2010	154.692
P-P 900	class never existed	Kieren Nugent	2010 (2009, 2004)	159.094 (157.507, 128.066)
M-F 900	class never existed	Alex Musson	2006	102.322
MPS-G 900	class never existed	Stephen Craven	2009 (2006)	143.436 (136.033)
P-PG 1000	class deleted 2013 rule book	Scott Webster	2003	181.241
M-PB 1000	class deleted 2013 rule book	John Pudney	2001 (2000)	166.481 (157.761)
P-PG 1350	class deleted 2013 rule book	Joe Amo	2006 (2004, 2003)	198.259 (121.424, 114.576)

P-PG 1650	class deleted 2013r ule book	Laszlo Molnar	2006	122.925

Records under review

Class	Comment	Rider	Year	Speed
P-M 500	No M class in P, reclass	Ron Davis	2013	95.400
M-PVF	No PVF class, reclass	Lucky Keiser	2003	102.494
P-VF 650	No VF class in P, reclass	Peter Arundel	2001	102.459
SC-P 650	No P class in SC, reclass	Matthew Kelly	2010	123.745
MPS-P 750	No P class in MPS, reclass	Max Hooper	2005	103.460
SC-P 750	No P class in SC, reclass	Sean Kelly	2010	120.270
SC-P 1000	No P class in SC, reclass	Sean Kelly	2010	121.112
SC-MVF 1350	No MVF class, reclass	Dave McLachlan	2010	147.423
SC-MVG 1350	No MVG class, reclass	Terry Prince	2006	113.293
SC-UF 1350	No UF class in SC, reclass	Terry Prince	2009	137.028

SECTION 9 DLRA OFFICERS & COMMITTEE MEMBERS 2020-2021

President	Greg Wapling	0434 821 307	president@dlra.org.au
Vice President	Rod Drabsch	0400 447 633	vicepresident@dlra.org.au
Secretary	Carol Hadfield	03 5472 4629 0417 593 261	secretary@dlra.org.au
Treasurer	Carol Hadfield	03 5472 4629 0417 593 261	secretary@dlra.org.au
Marketing Officer	David Athanasio	0481 131 179	marketing@dlra.org.au
Event Coordinator	Rob Carroll Greg Telford	0408 388 235 0402 801 627	event.coordinator@dlra.org.au event.coordinator2@dlra.org.au
Committee Members	James Stewart Garry Brennan	0400 818 080 0417 489 149	
Technical Chairman	Bob Ellis	+64 21 243 3191	technical.chairman@dlra.org.au
Chief Car Inspector	Lionel West	0448 733 240	car.tech@dlra.org.au

Chief Motorcycle Inspector	Graham Hadley	0419 532 812	motorcycle@dlra.org.au
Race Director	Steve Charlton	0438 429 664	racedirector@dlra.org.au
Chief Starter	Harry DeRee	0414 240 175	starter@dlra.org.au
Chief Timer	Bruce Willmott	0432 203 945	timer@dlra.org.au
Rule Book Coordinator	Gary Satara	0409 196 025	rulebook@dlra.org.au
Category Representative- Special Construction	James Stewart	0400 818 080	special.construction@dlra.org.au
Category Representative- Vintage	Steve Charlton	0438 429 664	vintage@dlra.org.au
Category Representative- Classic	Steve Charlton	0438 429 664	classic@dlra.org.au
Category Representative- Modified	Bob Ellis	0418 733 191	modified@dlra.org.au
Category Representative- Production	Steve Charlton	0438 429 664	production@dlra.org.au
Category Representativ	Steve Vowerk	0410 477 316	diesel-truck@dlra.org.au

e- Diesel Truck			
Category Representative- Motorcycle	Graham Hadley	0419 532 812	motorcycle@dlra.org.au
State Delegate – NSW – Car **State Delegate – NSW – Bike**	Gary Satara Dave McLachlan	0409 196 025 0413 833 891	nsw@dlra.org.au nsw_mc@dlra.org.au
State Delegate – QLD – Car **State Delegate – QLD – Bike**	Arthur De Main Ross Brown	0427 141 848 0407732125	qld@dlra.org.au qld_mc@dlra.org.au
State Delegate – VIC – Car **State Delegate – VIC – Bike**	Rod Hadfield Greg Watters	0428 122 206 0428 655 445	vic1@dlra.org.au mc.vic@dlra.org.au
State Delegate – SA – Car **State Delegate – SA – Bike**	Michael Brixton Grant Schlein	0418 806 650 0414 397 637	sa@dlra.org.au sa_mc@dlra.org.au

State Delegate – WA – Car **State Delegate – WA – Bike**	John Kirchner Jeff Lemon	0410 687 271 0439 088 683	wa.car@dlra.org.au wa@dlra.org.au
State Delegate – NT – Car **State Delegate – NT – Bike**	Vacant Josh Schuit	0419 865 401	nt_mc@dlra.org.au

This directory of officers is published for your convenience. Please feel free to email or call any of the above for any questions concerning Speed Week or rules.

APPENDIX A VEHICLE DATA CODES

Sample: 102 (engine code) / 326 (body code) = AA/FL

CARS

Engine Code	Engine Class	Engine Displacement
101	Omega	Engines using thermodynamic cycle other than Otto
102	AA	501 cid and over
103	A	440 thru 500 cid
104	B	373 thru 439 cid
105	C	306 thru 372 cid
106	D	261 thru 305 cid
107	E	184 thru 260 cid
108	F	123 thru 183 cid
109	G	93 thru 122 cid
110	H	62 thru 92 cid
111	I	46 thru 61 cid
112	J	31 thru 45 cid
113	K	30 cid and under
114	E1/T1	Elec/Turbine Vehicle Weight I
115	E2/T2	Elec/Turbine Vehicle Weight II
116	E3/T3	Elec/Turbine Vehicle Weight III
117	U	For UDT, MDT, HH2 & HH3 Body Classes
120	XO	Overhead valve & flathead inline
121	XF	Production Ford/Mercury flathead V-8 engine
122	XXF	XF engine w/overhead valve conversion
123	XXO	XO engine w/ specialty cylinder head

124	V4	Pre-1935 “American-made” four cylinders
125	M	Midget Vintage engine
126	V4F	Pre-1935 “American-made” four cylinders, flathead
127	S	Steam Engine
299	TO	Time Only
301	BFALT	Blown Fuel Altered Coupe
302	BFCC	Blown Fuel Competition Coupe
303	BFL	Blown Fuel Lakester
304	BFMR	Blown Fuel Modified Roadster
305	BFR	Blown Fuel Roadster
306	BFS	Blown Fuel Streamliner
307	BGALT	Blown Gas Altered Coupe
308	BGC	Blown Gas Coupe
309	BGCC	Blown Gas Competition Coupe
310	BGL	Blown Gas Lakester
311	BGMR	Blown Gas Modified Roadster
312	BGR	Blown Gas Roadster
313	BGS	Blown Gas Streamliner
314	BGT	Blown Grand Touring Sports
315	AIR	American Iron Roadster
316	BSTR	Blown Street Roadster
317	BVFALT	Blown Vintage Fuel Altered Coupe & Sedan
318	BVFCC	Blown Vintage Fuel Competition Coupe & Sedan
319	BVGALT	Blown Vintage Gas Altered Coupe & Sedan

320	BVGC	Blown Vintage Gas Coupe & Sedan
321	BVGCC	Blown Vintage Gas Competition Coupe & Sedan
322	DT	Diesel Truck
323	E	Electric Vehicle
324	FALT	Unblown Fuel Altered Coupe
325	FCC	Unblown Fuel Competition Coupe
326	FL	Unblown Fuel Lakester
327	FMR	Unblown Fuel Modified Roadster
328	FR	Unblown Fuel Roadster
329	FS	Unblown Fuel Streamliner
330	GALT	Unblown Gas Altered Coupe
331	GC	Unblown Gas Coupe
332	GCC	Unblown Gas Competition Coupe
333	GL	Unblown Gas Lakester
334	GMR	Unblown Gas Modified Roadster
335	GR	Unblown Gas Roadster
336	GS	Unblown Gas Streamliner
337	GT	Unblown Grand Touring Sports
338	BMP	Blown Modified Pickup
339	BMMP	Blown Modified Mid-Mini Pickup
340	PMP	Production Mid-Mini Pickup
341	MMP	Modified Mid-Mini Pickup
342	MP	Modified Pickup
343	MDT	Modified Diesel Truck
344	MVOT	Midget Vintage Oval Track
345	PP	Production Pickup
346	PRO	Production Coupe & Sedan
347	PS	Production Supercharged

348	STR	Unblown Street Roadster
349	UDT	Unlimited Diesel Truck
350	VFALT	Unblown Vintage Fuel Altered Coupe
351	VFCC	Unblown Vintage Fuel Competition Coupe
352	VGALT	Unblown Vintage Gas Altered Coupe
353	VGC	Unblown Vintage Gas Coupe
354	VGCC	Unblown Vintage Gas Competition Coupe
355	VOT	Vintage Oval Track
356	T	Turbine Vehicle
357	DS	Diesel Streamliner
358	HH2	Highway Hauler II
359	HH3	Highway Hauler III
360	BFMS	Blown Fuel Modified Sports
361	BGMS	Blown Gas Modified Sports
362	FMS	Unblown Fuel Modified Sports
363	GMS	Unblown Gas Modified Sports
364	CBFALT	Classic Blown Fuel Altered Coupe & Sedan
365	CBGALT	Classic Blown Gas Altered Coupe & Sedan
366	CBGC	Classic Blown Gas Coupe & Sedan
367	CFALT	Classic Unblown Fuel Altered Coupe & Sedan
368	CGALT	Classic Unblown Gas Altered Coupe & Sedan
369	CGC	Classic Unblown Gas Coupe & Sedan
370	CPRO	Classic Production Coupe & Sedan
371	CPS	Classic Production Supercharged Coupe & Sedan

372	S	Steam
373	BFRMR	Blown Fuel Rear Engine Modified Roadster
374	FRMR	Fuel Rear Engine Modified Roadster
375	BGRMR	Blown Gas Rear Engine Modified Roadster
376	GRMR	Gas Rear Engine Modified Roadster
599	TO	Time Only
900	BFCU	Blown Fuel Competition Ute
901	FCU	Fuel Competition Ute
902	BGCU	Blown Gas Competition Ute
903	GCU	Gas Competition Ute
904	BFALTU	Blown Fuel Altered Ute
905	FALTU	Fuel Altered Ute
906	BGALTU	Blown Gas Altered Ute
907	GALTU	Gas Altered Ute
908	BGU	Blown Gas Ute
909	GU	Gas Ute
910	PSU	Production Supercharged Ute
911	PROU	Production Ute
920	TGEN1	NASCAR vehicles manufactured from 1948 - 1966
921	TGEN2	NASCAR vehicles manufactured from 1967 - 1980
922	TGEN3	NASCAR vehicles manufactured from 1981 - 1991
923	TGEN4	NASCAR vehicles manufactured from 1992 - 2006

924	TGEN5	NASCAR vehicles manufactured from 2007 – 2012
930	TAUS	AUSCAR vehicles
940	TS3A	Australian Supercar vehicles manufactured from 1991 – 1996
941	TSV8	Australian Supercar vehicles manufactured from 1997 to current

MOTORCYCLES

Engine Code	Engine Class	Engine Displacement
201	50cc	50 cc engine
202	100cc	100 cc engine
203	125cc	125 cc engine
204	175cc	175 cc engine
205	250cc	250 cc engine
206	350cc	350 cc engine
207	500cc	500 cc engine
208	650cc	650 cc engine
209	750cc	750 cc engine
210	1000cc	1000 cc engine
211	1350cc	1350 cc engine
212	1650cc	1650 cc engine
213	2000cc	2000 cc engine
214	3000cc	3000 cc engine
215	3000cc+	3001 cc and above engine
216	Ω (Omega)	Electric/Steam/Turbine

Body Code	Body Class	Body Title
401	A-BF	Special Construction Supercharged Fuel
402	A-BG	Special Construction Supercharged Gas
403	A-F	Special Construction Modified Fuel
404	A-G	Special Construction Modified Gas
405	A-PBF	Special Construction Pushrod Supercharged Fuel
406	A-PBG	Special Construction Pushrod Supercharged Gas
407	A-PF	Special Construction Pushrod Fuel
408	A-PG	Special Construction Pushrod Gas
409	APS-BF	Special Construction Partial Streamline Supercharged Fuel
410	APS-BG	Special Construction Partial Streamline Supercharged
411	APS-F	Special Construction Partial Streamline Modified Fuel
412	APS-G	Special Construction Partial Streamline Modified Gas
413	APS-PBF	Special Construction Partial Streamline Pushrod Supercharged Fuel
414	APS-PBG	Special Construction Partial Streamline Pushrod Supercharged Gas
415	APS-PF	Special Construction Partial Streamline Pushrod Fuel

416	APS-PG	Special Construction Partial Streamline Pushrod Gas
417	APS-VBF	Special Construction Partial Streamline Vintage Supercharged Fuel
418	APS-VBG	Special Construction Partial Streamline Vintage Supercharged Gas
419	APS-VF	Special Construction Partial Streamline Vintage Fuel
420	APS-VG	Special Construction Partial Streamline Vintage Gas
421	A-VBF	Special Construction Vintage Supercharged Fuel
422	A-VBG	Special Construction Vintage Supercharged Gas
423	A-VF	Special Construction Vintage Fuel
424	A-VG	Special Construction Vintage Gas
425	P-P	Production Frame Production
426	P-PP	Production Frame Production Pushrod
427	P-PB	Production Frame Production Supercharged
488	P-PV	Production Frame Production Vintage
489	P-PPB	Production Frame Production Pushrod Supercharged
428	SC-BF	Sidecar Supercharged Fuel
429	SC-BG	Sidecar Supercharged Gas
430	SC-F	Sidecar Modified Fuel
431	SC-G	Sidecar Modified Gas
432	SC-PBF	Sidecar Pushrod Supercharged Fuel
433	SC-PBG	Sidecar Pushrod Supercharged Gas
434	SC-PF	Sidecar Pushrod Fuel

435	SC-PG	Sidecar Pushrod Gas
436	SC-VBF	Sidecar Vintage Supercharged Fuel
437	SC-VBG	Sidecar Vintage Supercharged Gas
438	SC-VF	Sidecar Vintage Fuel
439	SC-VG	Sidecar Vintage Gas
440	S-BF	Streamliner Supercharged Fuel
441	S-BG	Streamliner Supercharged Gas
442	S-F	Streamliner Fuel
443	S-G	Streamliner Gas
444	S-PBF	Streamliner Pushrod Supercharged Fuel
445	S-PBG	Streamliner Pushrod Supercharged Gas
446	S-PF	Streamliner Pushrod Fuel
447	S-PG	Streamliner Pushrod Gas
448	S-VBF	Streamliner Vintage Supercharged Fuel
449	S-VBG	Streamliner Vintage Supercharged Gas
450	S-VF	Streamliner Vintage Fuel
451	S-VG	Streamliner Vintage Gas
452	M-BF	Modified Supercharged Fuel
453	M-BG	Modified Supercharged Gas
454	M-F	Modified Fuel
455	M-G	Modified Gas
456	M-PBF	Modified Pushrod Supercharged Fuel
457	M-PBG	Modified Pushrod Supercharged Gas
458	M-PF	Modified Pushrod Fuel
459	M-PG	Modified Pushrod Gas
460	MPS-BF	Modified Partial Streamline Supercharged Fuel
461	MPS-BG	Modified Partial Streamline Supercharged Gas

462	MPS-F	Modified Partial Streamline Fuel
463	MPS-G	Modified Partial Streamline Gas
464	MPS-PBF	Modified Partial Streamline Pushrod Supercharged Fuel
465	MPS-PBG	Modified Partial Streamline Pushrod Supercharged Gas
466	MPS-PF	Modified Partial Streamline Pushrod Fuel
467	MPS-PG	Modified Partial Streamline Pushrod Gas
468	MPS-VBF	Modified Partial Streamline Vintage Supercharged Fuel
469	MPS-VBG	Modified Partial Streamline Vintage Supercharged Gas
470	MPS-VF	Modified Partial Streamline Vintage Fuel
471	MPS-VG	Modified Partial Streamline Vintage Gas
472	M-VBF	Modified Vintage Supercharged Fuel
473	M-VBG	Modified Vintage Supercharged Gas
474	M-VF	Modified Vintage Fuel
475	M-VG	Modified Vintage Gas
476	SCS-BF	Sidecar Streamliner Supercharged Fuel
477	SCS-BG	Sidecar Streamliner Supercharged Gas
478	SCS-F	Sidecar Streamliner Fuel
479	SCS-G	Sidecar Streamliner Gas
480	SCS-PBF	Sidecar Streamliner Pushrod Supercharged Fuel
481	SCS-PBG	Sidecar Streamliner Pushrod Supercharged Gas
482	SCS-PF	Sidecar Streamliner Pushrod Fuel
483	SCS-PG	Sidecar Streamliner Pushrod Gas

484	SCS-VBF	Sidecar Streamliner Vintage Supercharged Fuel
485	SCS-VBG	Sidecar Streamliner Vintage Supercharged Gas
486	SCS-VF	Sidecar Streamliner Vintage Fuel
487	SCS-VG	Sidecar Streamliner Vintage Gas
488	P-PV	Production Frame Production Vintage
489	P-PPB	Production Frame Production Pushrod Supercharged
490	APS-Omega	Partial Streamliner (Electric/Steam/Turbine only)
491	S-Omega	Streamliner (Electric/Steam/Turbine only)
492	A-CBF	Special Construction Classic Supercharged Fuel
493	A-CBG	Special Construction Classic Supercharged Gas
494	A-CF	Special Construction Classic Fuel
495	A-CG	Special Construction Classic Gas
496	APS-CBF	Special Construction Partial Streamline Classic Supercharged Fuel
497	APS-CBG	Special Construction Partial Streamline Classic Supercharged Gas
498	APS-CF	Special Construction Partial Streamline Classic Fuel
499	APS-CG	Special Construction Partial Streamline Classic Gas
500	P-PC	Production Frame Production Classic

501	P-PCB	Production Frame Production Classic Supercharged
502	SC-CBF	Sidecar Classic Supercharged Fuel
503	SC-CBG	Sidecar Classic Supercharged Gas
504	SC-CF	Sidecar Classic Fuel
505	SC-CG	Sidecar Classic Gas
506	S-CBF	Streamliner Classic Supercharged Fuel
507	S-CBG	Streamliner Classic Supercharged Gas
508	S-CF	Streamliner Classic Fuel
509	S-CG	Streamliner Classic Gas
510	M-CBF	Modified Classic Supercharged Fuel
511	M-CBG	Modified Classic Supercharged Gas
512	M-CF	Modified Classic Fuel
513	M-CG	Modified Classic Gas
514	MPS-CBF	Modified Partial Streamline Classic Supercharged Fuel
515	MPS-CBG	Modified Partial Streamline Classic Supercharged Gas
516	MPS-CF	Modified Partial Streamline Classic Fuel
517	MPS-CG	Modified Partial Streamline Classic Gas
518	SCS-CBF	Sidecar Streamliner Classic Supercharged Fuel
519	SCS-CBG	Sidecar Streamliner Classic Supercharged Gas
520	SCS-CF	Sidecar Streamliner Classic Fuel
521	SCS-CG	Sidecar Streamliner Classic Gas
550	TP-P	Production Trike
551	TP-PP	Production Pushrod Trike
552	T-BF	Trike Supercharged Fuel

553	T-BG	Trike Supercharged Gas
554	T-F	Trike Fuel
556	T-G	Trike Gas
557	T-CBF	Trike Classic Supercharged Fuel
558	T-CBG	Trike Classic Supercharged Gas
559	T-CF	Trike Classic Fuel
560	T-CG	Trike Classic Gas
561	T-PBF	Trike Pushrod Supercharged Fuel
562	T-PBG	Trike Pushrod Supercharged Gas
563	T-PF	Trike Pushrod Fuel
564	T-PG	Trike Pushrod Gas
565	T-VBF	Trike Vintage Supercharged Fuel
566	T-VBG	Trike Vintage Supercharged Gas
567	T-VF	Trike Vintage Fuel
568	T-VG	Trike Vintage Gas
569	TS-BF	Trike Streamliner Supercharged Fuel
570	TS-BG	Trike Streamliner Supercharged Gas
571	TS-F	Trike Streamliner Fuel
572	TS-G	Trike Streamliner Gas

APPENDIX B FORMS

B-1 Scrutineers Car Inspection and Classification Form

B-2 Scrutineers Motorcycle Inspection and Classification Form

B-3 Policy and Procedures for Rules Committee and Rule Changes Form

B-4 Protest Form

B-4 Proxy Form

B-1 Scrutineers Car Inspection & Classification Form

ENTRANT # _____

Primary / 1st Inspector's Signature:
_____ Print Name:
_____ Inspection Date:
_____

Over 200 mph / New Vehicle 2nd Inspector's Signature:
_____ Print Name:
_____ Inspection Date:
_____

Over 250 mph / 3rd Inspector's Signature:
_____ Print Name:
_____ Inspection Date:
_____

Sec. / Ref. No.	Requirements	N / A	1	2	3
Safety / Clothing:					
1.A, **1.S.2**	Vehicle and driver present in Race Ready Condition – i.e. race tyres, belts etc. / ☐ **Fuel Use Sticker**.				
3.Q	☐ 2.5KG Portable Fire Extinguisher / ☐ CB Radio in Push, Crew Vehicles				
3.A.2, 3: 3.D, 1, 2,3 . .	☐ Helmet, full face with shield – SA 2010 or later / ☐ Arm SFI 3.3 Restraints / ☐ Head / Neck Restraints				
3.A.1	☐ Drivers Suit / ☐ Head sock / ☐ Gloves / ☐ Shoes – to meet class requirements (SFI tag attached)				
Drivers Compartment:					

1.A	Vehicle chassis number sticker on chassis – must match log book				
3.B, 3.B.1	Roll Cage / Cross members – meets class requirements				
3.B.2	Roll Cage and Headrest padding – in helmet contact area (SFI approved)				
3.D.1	Seat securely mounted – guide rails, bottom and back – no sprung or plastic seats				
3.D.2	Seat Belt / Shoulder Harness / Crotch Strap (SFI spec 16.1 w/tag, not over 5 years old) – securely mounted				
3.D.3, 3.N	Fire / Fuel / Ignition / Parachute Release inside cage – easily accessible with restraints on				
3.L	Steering Wheel clearance - operates freely, rigidly mounted				
3.H.1	Reverse Gear lockout, auto trans mandatory, manual recommended				
3.J	Throttle / Toe Strap / Positive Stop				
3.W	Brake operation – inside cage / easy to operate with restraints on				

3.D.3, 4.P, 3.G . . .	Window Net / Floorboard / Secondary Flooring / Inner paneling – securely mounted as required				
3.1.2	All Fuels / Nitrous Oxide Bottles ***must*** be completely isolated from driver's compartment				
3.E	Fresh Air Vent – enclosed vehicles – fire protection around ducting				
3.E	Disabled door and steering wheel locks				
1.A	Bail Out Procedure Completed ☐ Primary Inspection ☐ Sighted in Logbook, Date				
Fire System:					
3.Q	0-200 mph – 5 KG. minimum - *driver and engine				
3.Q	0-200 mph – 5 KG. minimum - *driver and engine				
3.Q	201 + MPH 5 KG. minimum* over 2.5 KG for driver				
3.Q	Bottles securely mounted – hose clamps alone are not acceptable				

3.Q	Fire nozzle in driver's area				
3.Q	Bi-Annual (2 yr.) inspection Sticker / Certificate(s) legible without removing the bottles				
3.Q	Two (2) 180° Fire Nozzles directed to header / oil pan area				

Engine Compartment:

3.I.1	Fuel Shut-off – Electric Fuel Pump Safety Switch – check operation				
3.J	Throttle Operations – two return springs / over centre positive stop				
3.I, 3.R	Metal Clamps on Fuel Lines / Water lines				
3.F	Firewall – Metal (.060 minimum thickness) all holes sealed between engine and drivers compartment.				
3.P	Exhaust Headers directed away from course and braced				
3.1.2	Nitrous Oxide System / pressure relief valve vented to outside vehicle with hard line securely mounted				
3.X	Blower Restraints – (SFI type)				

Drivetrain:

3.O	Flywheel Shield – 1/4 " steel or approved equivalent				
3.H	Automatic / Planetary Transmission Shield – (SFI 4.1 recommended)				
3.I	Fuel lines, tanks & bottles in flywheel plane require extra shielding				
3.S	Drive Shaft Sling 360° - front 25% of driveshaft (1/4" x 1" steel minimum requirement)				

Chassis:

2.F	Tyres – ☐ O.E.M. up to Approved Speed, ☐ O.E.M. VR & ZR rates / Up to 200 MPH, ☐ over 201 MPH – Approved racing tyres only				
2.G	☐ O.E.M. Wheels – ☐ Welded Production Wheels / ☐ Certified Alloy Wheels, ¼" retainers / ☐ Racing Wheels ☐ Under 200MPH proper lugs / ☐ Over 200MPH, 1" lugs / ☐ over 29" dia, 17" wheel, five 1/2 " dia studs, 1" lugs				
2.F	☐ Metal Caps on all valve stems / ☐ Metal Valve stems on all tubeless tyres				

2.G	Wheel Cover – 6 machine grade screws / 3 Dzus fasteners				
3.L, 3.T	Steering Gear, Shaft securely mounted / Steering Stops				
3.T	Safety washers on all heim joints				
2.D	Shock Absorber for each sprung (non-rigid) wheel				
3.S	Traction Bar slings – minimum ¼" dia				
3.1	Fuel / Water tanks securely mounted / properly vented				
2.J, 3.K	Ballast / Battery securely mounted				
2.E	Safety Hubs / no "C" clips / Front / Rear				
3.M	☐ Parachute over 175, ☐ 2 chutes over 300 – check mounting / operation				
2.I	Bumper / Push Bar, prompt removal Device / Tow Rope Attachment Point				

Body:

2.K	Body meets class requirements / Neat appearance				
2.I, 3.1.2	Vehicle Number / Class / Nitrous Oxide inside markings on body and legible				
4.X	Roof Rails / Cars over 200 MPH – (GC, CC, ALT, MS, PRO, PS and GT)				
3.U	☐ ***All*** non-laminated glass windows and lights ***must*** be covered on both sides with safety film ☐ polycarbonate over 200mph ☐ Frameless Window.				
3.U	Window Tabs – front and rear over 175 MPH				
3.E, 2.M	☐ Doors / Canopy easy to open from inside and out – check operation / ☐ "Open" clearly marked for canopy / Hood Release				
3.K	Main Battery Disconnect Switch - visible and clearly marked ☐ Front ☐ Rear ☐ Operable / Clearly Marked				

Remarks:

B-2 Scrutineers Motorcycle Inspection & Classification Form

Technical Inspection				
	Paperwork	**1st**	**2nd**	**3rd**
1.A	TECH SHEET / LOG BOOK – check log no , log book, comments, codes			
1.S.2	**Fuel Use Sticker**			
7.B.1	ENTRY NUMBER 7 CLASS DESIGNATION – contrasting and displayed correctly			
7.A.1	LICENSE – State Driver's License with motorcycle endorsement or DLRA			
General Requirements ALL Motorcycles & Streamliners (if applicable)				
	Riding Apparel & Support Equipment	**1st**	**2nd**	**3rd**
7.C.1	HELMET, full face with shield – SA 2010 or later, ECE 22.05, AS1698:2006. Date: [ ]			
7.C.2	RIDING SUIT – Good condition, 1 piece or 2-piece zip together, all leather, back protector			
7.C.3	BOOTS – suitable for motorcycle riding and at least 8" high			
7.C.4	GLOVES – Must be leather, but not perforated or skeleton type			
1.L	SUPPORT VEHICLE EQUIP. –2.5kg. Fire Extinguisher, Flashing Light, CB Radio, spill kit, shovel, broom			
	Tyres & Wheels	**1st**	**2nd**	**3rd**

7.B.8	TYRE SPEED RATINGS – **Check and note tyre speed ratings for class record/minimum [ ]**			
7.B.8	TYRES – All production (DOT) tyres must be less than 10 years old (V, Z, W) Date: [ ]			
7.B.8	TYRE CONDITION – must be good, without repairs, no cords showing			
7.B.9	TYRE VALVE STEMS & CAPS – must be metal			
7.B.10	WHEELS / SPOKES – check for loose or missing spokes, bent or cracked rims			
7.B.15	WHEEL RETENTION – Check removable axle caps are lock wired			
	Fuel System	**1st**	**2nd**	**3rd**

7.B.25	FUEL TANK – must be well constructed and securely mounted			
7.B.25	FUEL TANK CAP – shall be a positive locking type or screw-on			
7.B.2.4	FUEL FILTERS AND PETCOCKS – No plastic components, must be metal			
7.B.25	FUEL LINES – must be safely routed and secured with metal clamps			
7.B.25	FUEL LINES – All un-valved lines are fireproofed, including tank crossover			
7.B.25	FUEL LINES – Clear fuel lines allowed if line is marked “for fuel use”			
7.B.21	NITROUS OXIDE SYSTEM – Bottle shut-off protected, location marked, if covered			
	Controls	**1st**	**2nd**	**3rd**

7.B.3	THROTTLE – self-closing, quickly and smoothly, no throttle locks allowed			
7.B.23	BRAKE CONTROL(S) – operable with hand on handlebar or foot on foot peg			
7.B.2.1	ENGINE KILL SWITCH – positive off – not push and hold type, operable from grips			
7.B.2.2	ENGINE KILL LANYARD – Check operation and mounting angle			
7.B.2.3	FUEL PUMP STOP LANYARD – Required if engine kill lanyard does not shut off fuel pump			
7.B.2.4	GASOLINE / FUEL PUMP SHUT-OFF – operable from riding position, check operation			
7.B.2.5	FUEL SHUT-OFF – operable from grips, check operation (FUEL CLASS)			
7.B.4	CONTROL LEVERS – have ball ends, 12.7mm (1/2") diameter			
	Frame, Suspension & Steering	**1st**	**2nd**	**3rd**
7.B.7	FOOT RESTS – required, location cannot expose rider to direct engine exhaust			
7.B.19	FORK STOPS – Stops steering before end of steering dampener			
7.B.22	CHAIN / BELT GUARD – metal construction, no plastic. Width at least 1.5 times chain / belt and covers from centre of front sprocket to rear edge of rear sprocket			
7.B.22	DRIVE SPROCKET, PRIMARY DRIVE and CLUTCH – must have side protection			
7.B.17	STEERING DAMPENER – required (ALL classes)			

	Brakes	**1st**	**2nd**	**3rd**
7.B.23	BRAKES – functional front & rear brake required, unless class allows rear brake only			

	Other	**1st**	**2nd**	**3rd**
7.B.24	BALLAST – located ahead of rear axle, securely mounted, metal hold downs only			
7.B.26	BATTERY – securely mounted, metal hold downs only			
7.B.5	LIGHTS / MIRRORS – removed or all glass or plastic lens are taped			
7.B.12	WINDSHIELD / WINDSCREENS – must be shatter resistant material			
7.B.20	EXHAUST PIPE(S) – outlet(s) directed away from rider, rear wheel and the course			
7.B 29	COOLANT – Check coolant type			

See over for – Additional Requirements for Motorcycle Streamliners and Requirements for Sidecars

Additional Requirements for Motorcycle Streamliners

	Apparel & Support Equipment	**1st**	**2nd**	**3rd**
7.C.1	HELMET – Helmets for motorcycle streamliners, trike streamliners, and sidecars streamliners should comply with rule 3.A.2			

7.H.3	DRIVERS SUIT / HEADSOCK / SHOES / GLOVES – meet class requirements, SFI tags attached			
	Driver Compartment	**1st**	**2nd**	**3rd**
7.H.4	ROLL BAR / ROLL CAGE / CROSS BRACES – meet class requirements, correctly braced			
7.H.4	ROLL BAR and HEADREST PAD – required in helmet contact area (SFI approved)			
3.D.1	SEAT securely mounted – guide rails, bottom and back – no sprung or plastic seats			
7.H.5	SEAT BELTS / SHOULDER HARNESS / CROTCH STRAP (SFI spec 16.1 w/tag, not over 5 years old) – securely mounted, HANS Type Device: Head and Neck Restraint			
7.H.17	NITROUS OXIDE – no nitrous bottles in driver's compartment			
3.1	FUEL TANK(S), BATTERY & FUEL LINES - must be located outside driver's compartment			
7.H.6	FRESH AIR VENT – driver compartment has adequate venting			
7.H.7	WINDSHIELD / CANOPY – shatterproof polycarbonate or acrylic or safety glass 120° view			
7.H.14	DRIVER'S SPACE – must be free of sharp edges, projections and other sources of injury			
7.H.10	BAIL-OUT DRILL – verify driver is able to exit liner unassisted within 15 seconds			
7.H.10	CANOPY – check latch operation inside and out, exterior latch clearly marked 'OPEN'			
3.L	STEERING CONTROL – operates freely, rigidly mounted, must have steering stops			

3.W	BRAKE CONTROL – Located inside cage / easy to operate with restraints on			
3.W /N/I	FIRE / FUEL/ IGNITION / PARACHUTE CONTROLS – driver must demonstrate access / operation to each control while wearing helmet, suit and gloves while properly restrained			
7.H. 9	TYRES – Any tyre within the driver compartment must have a fender to protect the driver			
3.J	THROTTLE OPERATION – self closing, quickly and smoothly			
	Fire Suppression System	**1st**	**2nd**	**3rd**
3.Q	MINIMUM AGENT REQUIREMENTS – must meet class / speed minimums			
7.H. 2	FIRE SYSTEM – >150mph nozzle located in driver's area, < 150mph, driver + engine			
3.Q	FIRE NOZZELS - 1 in driver's area, over 150mph, 2 more nozzles aimed at header / oil pan			
3.Q	FIRE BOTTLES – must be securely mounted – hose clamps not acceptable			
3.Q	BI-ANNUAL INSPECTION STICKER(S) – valid and readable without removing bottles			
	Chassis	**1st**	**2nd**	**3rd**
7.H. 14	HEIM JOINTS – safety washers required on all heim joints (NO aluminum)			
7.H. 19	SHOCK ABSORBERS – required for each sprung wheel			
7.H. 22	CHAIN GUARD – positioned to prevent damage to oil, coolant, fuel and brakes lines			

7.H.13	PARACHUTE - 1 required, 2 required over 250mph, check mounting / demo operation			
7.H.23	MAIN BATTERY DISCONNECT SWITCH – must be visible and clearly marked outside			
7.H.19	SKIDS – must have positive lock in up & down positions, surface friendly design			
7.H.11	WHEELS – over 200mph, must use race rims or be reinforced per 2. G			
7.H.1	FIREWALL – metal / .060" minimum thickness, all holes sealed			
3.F	FIREWALL – linkage passing through firewall goes through upper half only			
3.P	EXHAUST PIPE(S) – outlet(s) must be directed away from driver, wheels, tyres and course			
7.H.1	DRAINS –must have adequate drain holes in the engine / fuel compartment			
7.B.21	NITROUS BOTTLE – must be securely mounted, pressure relief valve vent to outside with hard line			
7.H.21	TOWING – must have obvious tow strap attachment			

Requirements for Sidecars

		1st	**2nd**	**3rd**
7.1.1	LOADING – side cars wheel must be sufficiently loaded to assure stability (10%)			
7.1.8	SIDECAR ATTACHMENT – attaching fasteners secured by safety wire, pins or other			
7.1.10	SIDECAR WHEEL – the inside (toward rider) of the sidecar wheel must be covered			
7.1.11	PLATFORM – minimum dimensions each side 30.48 cm wide by 81.28 cm long, rectangular shaped			

7.1.11	PLATFORM – Must demonstrate the platform accommodates a kneeling passenger			

Remarks

_____

_____

_____

_____

-

_____

_____

ENTRY No.	**MEMBER No.**	**CLASS**

B-3 Policy and Procedure for DLRA Rules Committee and Rule Changes

Policy Objective:

The purpose of this policy is to ensure the integrity and consistency of the DLRA Rule Book which forms the basis on which events are conducted so events are run as fairly and safely as possible. The process for DLRA rule changes is not an annual event, but rather an ongoing process wherein each proposal is reviewed via specific steps. Only when the review process is complete will the Rules Committee present the issues to the DLRA Board for action.

By adhering to the process herein described, any current rule/class or rule/class change proposal will receive a fair and thorough examination and explanation, allowing for membership input prior to DLRA Board action.

Procedure:

Submission - Any DLRA member may propose a rule change or seek clarification or validation by either of TWO methods:

1. BY PETITION - A member may complete a Rule Change/Clarification Form (Petition) and submit to the Rules Committee Coordinator who will then forward to the appropriate Chief Steward (car or motorcycle). Petitions directed to the DLRA office or Board will be forwarded to the Rules Committee Coordinator then to the appropriate Chief Steward (car or motorcycle). Members may obtain the petition form from:

3. DLRA office
4. Chief Steward (car or motorcycle)
5. Event Registration Trailer
6. Record Certification Officer
7. Rules Committee Coordinator
8. DLRA website- www.dlra.org.au

NOTE - Experience has shown that some rule issues involve a considerable amount of research. It is incumbent upon the person requesting the rule change to complete all appropriate information on the form. Petitioners may be required to conduct the additional research at the discretion of the appropriate Chief Steward.

2. BY PROTEST - Validation of a specific rule or a certain vehicle's application to a rule may be accomplished by completion of the Protest Form. The instructions and

conditions for protest are found in the DLRA Rule Book 1.I. Protest forms are available in the registration trailer. The DLRA Contest Board will decide protests within 30 days of receipt. The DLRA may appoint a committee to investigate the protest and said committee may include appropriate technical expertise that is available outside of DLRA membership.

The process of the protest may ultimately affect a rule change by direction of the DLRA Board.

THE PATH - Regardless of submission point, all rule change, review petitions and protests will be forwarded to the Rule Book Coordinator who will maintain a log showing date received, petitioner, issue and status. The appropriate Chief Steward shall review each petition or protest. If additional information or research is necessary, the Chief Steward may return the form to the petitioner/protester for more information. When the Chief Steward is satisfied that he has all the necessary and appropriate information, and it does not require a rule book change or addition, he/she may

1. Interpret and/or clarify simple issues and then answer the issue and advise the Rules Committee Coordinator to set the status to 'Completed'.
2. Determine that the issue is of a general nature and forward to the Rules Committee Coordinator to include on the Rules Meeting agenda, or
3. If it is a Category specific issue, forward it to the representative of the appropriate Category (i.e.: Special

Construction/Production/Modified etc.) for determination. The appropriate Chief Steward shall include his/her comments and recommendations before forwarding to the Category representative.

Car and Motorcycle Category representatives - Upon receipt of a petition from the Chief Steward it is the responsibility of each Category representative to confer with appropriate members and review each rule petition. Category representatives may make simple rule interpretations and clarifications. All petitioners will be answered in writing. The petition is then returned to the Chief Steward with a copy of the written answer attached. More complex issues may require that the Category representative take a lead role in research or asking the petitioner for more information. If it is determined that the issue needs to be sent to the Rules Committee, the Category representative shall submit the petition back to the Chief Steward who then forwards it to the Rules Committee Coordinator, with category committee recommendations and ask to include it on the agenda for the next Rules Committee meeting. Issues that have not completed this process shall not be placed on the Rules Committee agenda.

RULES COMMITTEE MEETING

The Rules Committee is required to, but not limited to meet at least once per year. The date for the meeting shall be set at least 14 days prior to the meeting.

Rules Committee Composition: Any DLRA member is welcome to attend the rules committee meeting, however, the voting rules committee shall be composed of:

- Rules Committee Coordinator (appointed by DLRA Board)
- A representative of each category of vehicle or his/her designee (Special Construction, Vintage, Classic, Modified, Production, Diesel Truck and Motorcycle)
- Chief Car Steward
- Chief Motorcycle Steward

The attendance of the car and motorcycle technical stewards is **mandatory** at Rules Committee meetings.

Only those attending as a designated rules committee member are entitled to vote on issues.

The Rules Committee Coordinator is responsible for:

- Recommending meeting dates
- Developing the rules meeting agenda
- Making note of meeting decisions
- Preparation of a recommendation package for the DLRA Board and ultimately incorporating Board action into new DLRA rulebook.

RULES MEETING AGENDA - Issues brought before the Rules Committee for action shall be done ONLY by two means:

- Issues to be reviewed by virtue of the petitions that have completed processing and have been forwarded by the

any of the Chief Stewards or Rules Committee Coordinator.

- Issues that have been referred to the Rules Committee by the DLRA Board.

Any issues which have not completed the entire review process shall be set aside until that process is completed and acted upon at a future Rules Committee meeting.

The Rules Committee shall review issues on the agenda and submit to the DLRA Board with recommendations. Issues that the Rules Committee cannot make recommendations for due to lack of information shall be returned to appropriate Chief Steward for additional research.

Adopted DLRA - May 2011

B-3 Rule Change or Addition Submission Form (Petition)

Petitioner: _____

_____

< Name > <Home Phone # >

_____

_____

< Address > < Work Phone # >

_____ _____

_____ _____

< City > < State > < P/code >

< Membership Number >

_____

< E-mail address >

Issue:

_____

_____

_____

_____

_____
_____

Relevant Rule: Section _____ Page #
_____

Desired Outcome:
_____
_____

_____
_____

_____
_____

Reason change is necessary:
_____
_____

_____
_____

_____
_____

What are the side effects? (Example: 20 new classes, records voided, etc) _____

_____

_____

Desired Rulebook (re) wording:

_____

_____

_____

_____

Forward this form to Rules Committee Co-Coordinator listed in DLRA Rulebook.

* Note: You may be required to research and develop information concerning the effects of this proposed change.

B-4 Protest form

Name: . . . . . Signature. . . . . .

. . . . . .

Membership Number: . . . . . Date . . . . . .

. . . . . .

Reason for protest (Attach additional sheets if space insufficient)

. . . . . .

. . . . . .

. . . . . .

. . . . . .

. . . . . .

. . . . . .

. . . . . .

. . . . . .

. . . . . .

. . . . . .

. . . . . .

. . . . . .

Describe what you think the outcome of this protest should be

. . . . . .

. . . . . .

. . . . . .

. . . . . .

. . . . . .

. . . . . .

. . . . . .

DLRA use only	Approved / Rejected
Protest fee refunded	Yes / No

B-5 PROXY FOR MEETING OF THE DRY LAKES RACERS AUSTRALIA

NOTE: This document is to be used by active members to appoint a proxy. A proxy is allowed to vote or act on behalf of another active member, if that active member cannot attend the Meeting.

I _____, DLRA MEMBER No. _____ hereby appoint and authorize
<name>
<number>

_____, DLRA MEMBER No. _____ to act as proxy and to vote on my
<name>
<number>
behalf at the meeting of the Dry Lakes Racers Australia, which will be held at:

Address:

_____

_____

Date: _____ Time:

_____

GENERAL POWERS (You may choose to grant general powers, limited powers or both. Check “General Powers” if you want your proxy holder to vote on other issues which might come up at the meeting and for which a limited proxy is not required).

❑ I authorize and instruct my proxy to use his or her best judgment on all other matters which properly come before the meeting and for which a general power may be used.
LIMITED POWERS (for your vote to be counted on the following issues, you must indicate your preference in the blank(s) provided below).
❑ I specifically authorize and instruct my proxy holder to cast my vote in reference to the following matters as indicated below:

1. Nomination of Office Bearers	
President:	
Vice President	
Secretary	
Treasurer	

2. Voting for Office Bearers	
President:	
Vice President	
Secretary	
Treasurer	

3. Nomination of Operational Positions	
Race Director:	
Chief Car Steward(s):	
Chief Motorcycle Steward(s)	
Starter	
Assistant Starter(s)	
Timer	

4. Voting for Operational Positions	
Race Director:	
Chief Car Steward(s):	
Chief Motorcycle Steward(s)	
Starter	
Assistant Starter(s)	
Timer	

Assistant Timer(s)	
Steward	
Scrutineer	
Assistant Scrutineer(s)	
State Delegates	

Assistant Timer(s)	
Steward	
Scrutineer	
Assistant Scrutineer(s)	
State Delegates	

5. Rulebook

_____

_____

6. Constitution

_____

_____

This proxy shall be void if I personally attend the said meeting.
IN WITNESS WHEREOF, I have executed this proxy on the day of _____

<Date>

_____

_____

<Signature>

B-6 DLRA Results Amendment Form

Whilst every attempt is made to ensure that the results and records published are correct. We recognise that from time to time we may get it wrong after all we're only human, just like you. Anyway, here is your chance to let us know about any errors or omissions in the results or records and get it corrected. Amendments will only be accepted by using this form, don't tell or ring anyone expecting it to happen, 'cause it won't.

NOTE: When amendments are received, they are referred to the DLRA Timer and may take some time to appear in the results or records so please be patient.

Name:	
Address:	
City:	
State:	
Postcode:	
Country:	
Email Address:	
DLRA Member Number:	

Details of Amendment

Published Record

Year:	
Driver:	
Vehicle:	
Class:	

Speed:	

Claim or Adjustment

Year:	
Driver:	
Vehicle:	
Class:	
Speed:	

Supporting Details

Signed:

Date:

SUMMARY OF RULE ADDITIONS & CHANGES

Below are the clauses that have been added or changed from the 2020 DLRA Rulebook.

Bold face indicates changes.

1.V RED AND YELLOW TAGS
3.B. 1 ROLL CAGE
5.D.4.a MODIFIED GRAND TOURING SPORT
7.B.7 FOOT RESTS
7.B.13 SUPERCHARGED
7.B.27 FENDERS
7.E.1.13 CAMERAS
7.F.12 PARTIAL STREAMLINING
7.G.10 SPECIAL CONSTRUCTION- A
7.J.11 CLASS PUSHROD BLOWN GAS